JVC

SERVICE MANUAL

DIGITAL VIDEO CAMERA

GR-DVL9000EG/DVL9000EK

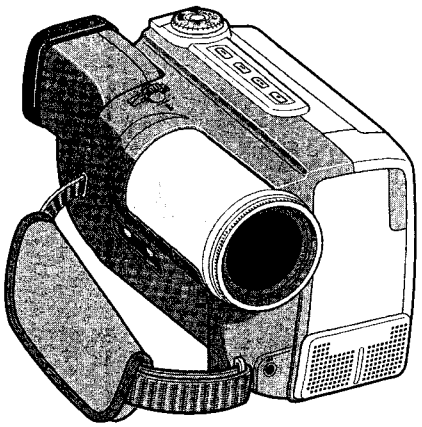

Mini DV PAL

SPECIFICATIONS *(The specifications shown pertain specifically to the model GR-DVL9000EG)*

General

Power	: DC 6.3 V⎓ (using AC Adapter) DC 7.2 V⎓ (using Battery)
Power consumption	: 6.3 W (viewfinder on), 8.2 W (LCD monitor on)
Format	: DV Format (SD mode)
Signal format	: PAL Standard
Video signal recording format	: Digital Component Recording
Cassette	: MINI DV Cassette
Tape Speed	: SP: 18.8 mm/s LP: 12.5 mm/s
Maximum recording time	: SP: 60 min. LP: 90 min. (using DVM-60 cassette)
Pickup	: 1/3" CCD (Progressive Scan CCD)
Lens	: F1.2, f = 5 to 50 mm, 10:1 Power Zoom Lens
Filter diameter	: ø58 mm (when using the optional lens adapter GL-V5842U)
LCD monitor	: 4", 112,000 pixel TFT/LCD panel
Viewfinder	: 0.55" colour LCD, 113,000 pixel
Operating temperature	: 0 to 40°C
Operating humidity	: 35 to 80%
Storage temperature	: -20 to 50°C
Dimensions	: 86 (W) x 86 (H) x 145 (D) mm
Weight	: Approx. 670 g (without cassette and battery) Approx. 780 g (incl. cassette and battery)

Video

Output	: 1 Vp-p, 75 Ω unbalanced, analogue output (via ø3.5 mm AV output jack)
S2 VIDEO output	: Y: 1 Vp-p, 75 Ω, analogue output C: 0.29 Vp-p, 75 Ω, analogue output
DV output	: 4-pin, IEEE1394 conformant, digital output
Digital still output	: ø3.5 mm, 4-pole, mini-head jack (compatible with RC-5325 plug)

Audio

Output	: -8 dBs, 1 kΩ analogue output (via ø3.5 mm AV output jack)
Headphone output	: Stereo (via ø3.5 mm AV output jack)
External microphone input	: -62 dBs, high impedance unbalanced with ø3.5 mm (STEREO)
Speaker	: Monaural

AC ADAPTER/CHARGER

Power	: AC 110 to 240 V∿, 50/60 Hz
Power consumption	: 20 W
Output power	: DC 7.2 V⎓, 1.2 A (charge) : DC 6.3 V⎓, 1.8 A (VTR)
Operating temperature	: 0°C to 40°C (when charging, 10°C to 35°C)
Dimensions	: 94 mm (W) x 36 mm (H) x 122 mm (D)
Weight	: Approx. 270 g

Specifications shown are for SP mode unless otherwise indicated. E & O.E. Design and specifications subject to change without notice.

COPYRIGHT © 1998 VICTOR COMPANY OF JAPAN, LTD.

No. 86404
March 1998

TABLE OF CONTENTS

Section	Title	Page
	Important Safety Precautions	
	INSTRUCTIONS (This instruction refer to the GR-DVL9000EG)	
1. DISASSEMBLY		
1.1	BEFORE ASSEMBLY AND DISASSEMBLY	1-1
1.1.1	Precautions	1-1
1.1.2	Assembly and disassembly	1-1
1.1.3	Disconnection of Connectors (Wires)	1-1
1.1.4	Screws used in assembly of cabinet parts and boards	1-2
1.2	TOOLS REQUIRED FOR ADJUSTMENTS	1-2
1.3	DISASSEMBLY/ASSEMBLY OF CABINET PARTS	1-4
1.3.1	Disassembly flow chart	1-4
1.3.2	Disassembly method	1-4
1.4	DISASSEMBLY/ASSEMBLY OF CAMERA PARTS /DECK PARTS	1-8
1.4.1	Disassembly flow chart	1-8
1.4.2	Disassembly method	1-8
1.5	DISASSEMBLY/ASSEMBLY OF OP BLOCK	1-12
1.5.1	Replacement of CCD Image Sensor	1-12
1.5.2	How to remove CCD image sensor	1-12
1.5.3	How to reassemble CCD image sensor to OP block	1-12
1.6	CONNECTION OF CONNECTORS	1-13
1.6.1	List	1-13
1.6.2	Connection of Connectors (PATCH CORDS)	1-14
1.7	HOW TO TAKE OUT TAPE	1-15
1.8	SERVICE NOTE	1-17
2. MECHANISM ADJUSTMENT		
2.1	PRELIMINARY REMARKS ON ADJUSTMENT AND REPAIR	2-1
2.1.1	Precautions	2-1
2.1.2	Notes on disassembling/reassembling procedure	2-1
2.1.3	Screws and washers used in mechanism	2-1
2.2	DISASSEMBLING/REASSEMBLING MECHANISM AND CASSETTE HOUSING	2-2
2.2.1	General statement	2-2
2.2.2	Removing cassette housing	2-2
2.2.3	Disassembly/assembly of mechanism section	2-3
2.2.4	Checkup and adjustment of mechanism phase	2-10
2.2.5	Attaching the slide deck and main deck	2-11
2.2.6	Adjustment of tension pole position	2-12
2.3	PROCEDURE OF COMPATIBILITY AND P.G. EQ. (ERROR RATE) ADJUSTMENTS	2-12
2.3.1	Precautions	2-12
2.3.2	Linearity adjustment	2-13
2.3.3	PB switching point adjustment	2-13
2.3.4	Head REC current adjustment	2-13
2.3.5	P.B. EQ. (error rate) SP/LP adjustment	2-14
2.3.6	Setup and use of error rate jig	2-15
2.4	REMARKS	2-17
2.4.1	Cleaning	2-17
2.4.2	OILING AND GREASING	2-17
2.5	MECHANISM TIMING CHART	2-18
3. ELECTRICAL ADJUSTMENT		
3.1	PREPARATION BEFORE ADJUSTMENT	3-1
3.1.1	Precautions	3-1
3.1.2	Required test equipment	3-1
3.1.3	Jigs necessary for electrical adjustment	3-1
3.1.4	Setup	3-1
3.1.5	Setup for electrical adjustment with personal computer (Type II)	3-2
4. CHARTS AND DIAGRAMS		
	NOTES OF SCHEMATIC DIAGRAM	4-1
	CIRCUIT BOARD NOTES	4-2
4.1	BOARD INTERCONNECTIONS	4-3
4.2	SYSCON SCHEMATIC DIAGRAM	4-7
4.3	SERVO SCHEMATIC DIAGRAM	4-9
4.4	AUDIO PROCESS SCHEMATIC DIAGRAM	4-12
4.5	CLOCK GENERATOR SCHEMATIC DIAGRAM	4-15
4.6	SPEAKER SCHEMATIC DIAGRAM	4-17
4.7	SHUFFLING SCHEMATIC DIAGRAM	4-19
4.8	ECC SCHEMATIC DIAGRAM	4-21
4.9	VIDEO DA SCHEMATIC DIAGRAM	4-23
4.10	VITERBI SCHEMATIC DIAGRAM	4-25
4.11	A/D SCHEMATIC DIAGRAM	4-27
4.12	Y/C SCHEMATIC DIAGRAM	4-29
4.13	CPU SCHEMATIC DIAGRAM	4-31
4.14	OP DRIVER SCHEMATIC DIAGRAM	4-33
4.15	DV OUT SCHEMATIC DIAGRAM	4-35
4.16	VF MAIN SCHEMATIC DIAGRAM	4-37
4.16	VF SCHEMATIC DIAGRAM AND VF CIRCUIT BOARD	4-39
4.18	MAIN1 CIRCUIT BOARD AND POWER SAVE CIRCUIT BOARDS	4-41
4.19	AUDIO AD/DA SCHEMATIC DIAGRAM	4-47
4.20	MIC AMP SCHEMATIC DIAGRAM	4-49
4.21	VIDEO OUT SCHEMATIC DIAGRAM	4-51
4.22	REGULATOR CONTROL SCHEMATIC DIAGRAM	4-53
4.23	MAIN2 CIRCUIT BOARD	4-55
4.24	DC/DC SCHEMATIC DIAGRAM	4-61
4.25	DC/DC CIRCUIT BOARD	4-63
4.26	MDA SCHEMATIC DIAGRAM	4-65
4.27	PRE/MDA CIRCUIT BOARD	4-67
4.28	PRE/REC SCHEMATIC DIAGRAM	4-69
4.29	MONITOR SCHEMATIC DIAGRAM	4-71
4.30	MONITOR CIRCUIT BOARD	4-73
4.31	CCD SCHEMATIC DIAGRAM	4-75
4.32	CCD CIRCUIT BOARD	4-77
4.33	OPERATION (DECK), OPERATION (CAMERA) AND IR SCHEMATIC DIAGRAMS	4-79
4.34	POWER SYSTEM BLOCK DIAGRAM	4-81
4.35	VIDEO & AUDIO SYSTEM BLOCK DIAGRAM	4-83
4.36	REGULATOR SYSTEM BLOCK DIAGRAM	4-87
5. PARTS LIST		
5.1	PACKING ASSEMBLY <M1>	5-1
5.2	FINAL ASSEMBLY <M2>	5-3
5.3	MECHANISM ASSEMBLY <M3>	5-7
5.4	ELECTRICAL PARTS LIST	5-9
	MAIN1 BOARD ASSEMBLY <01>	5-9
	MAIN2 BOARD ASSEMBLY <02>	5-18
	DC/DC BOARD ASSEMBLY <03>	5-22
	PRE/MDA BOARD ASSEMBLY <04>	5-23
	MONITOR BOARD ASSEMBLY <05>	5-25
	VF BOARD ASSEMBLY <06>	5-27
	CCD BOARD ASSEMBLY <07>	5-27
	OPERATION(DECK) BOARD ASSEMBLY <11>	5-29
	OPERATION(CAMERA) BOARD ASSEMBLY <12>	5-29
	IR BOARD ASSEMBLY <13>	5-29
6. TECHNICAL INFORMATION		
6.1	EMERGENCY DISPLAY	6-1
6.2	TEST MODE	6-2
6.2.1	How to set TEST mode	6-2
6.2.2	How to cancel TEST mode	6-2

Important Safety Precautions

Prior to shipment from the factory, JVC products are strictly inspected to conform with the recognized product safety and electrical codes of the countries in which they are to be sold. However, in order to maintain such compliance, it is equally important to implement the following precautions when a set is being serviced.

●Precautions during Servicing

1. Locations requiring special caution are denoted by labels and inscriptions on the cabinet, chassis and certain parts of the product. When performing service, be sure to read and comply with these and other cautionary notices appearing in the operation and service manuals.

2. Parts identified by the ⚠ symbol and shaded (▒) parts are critical for safety.
   Replace only with specified part numbers.
   Note: Parts in this category also include those specified to comply with X-ray emission standards for products using cathode ray tubes and those specified for compliance with various regulations regarding spurious radiation emission.

3. Fuse replacement caution notice.
   Caution for continued protection against fire hazard.
   Replace only with same type and rated fuse(s) as specified.

4. Use specified internal wiring. Note especially:
   1) Wires covered with PVC tubing
   2) Double insulated wires
   3) High voltage leads

5. Use specified insulating materials for hazardous live parts. Note especially:
   1) Insulation Tape 3) Spacers 5) Barrier
   2) PVC tubing 4) Insulation sheets for transistors

6. When replacing AC primary side components (transformers, power cords, noise blocking capacitors, etc.) wrap ends of wires securely about the terminals before soldering.

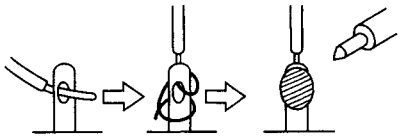

Fig.1

7. Observe that wires do not contact heat producing parts (heatsinks, oxide metal film resistors, fusible resistors, etc.)

8. Check that replaced wires do not contact sharp edged or pointed parts.

9. When a power cord has been replaced, check that 10-15 kg of force in any direction will not loosen it.

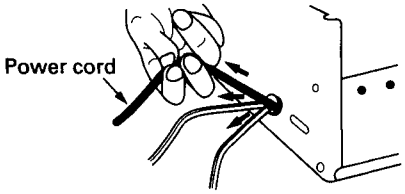

Fig.2

10. Also check areas surrounding repaired locations.

11. Products using cathode ray tubes (CRTs)
    In regard to such products, the cathode ray tubes themselves, the high voltage circuits, and related circuits are specified for compliance with recognized codes pertaining to X-ray emission. Consequently, when servicing these products, replace the cathode ray tubes and other parts with only the specified parts. Under no circumstances attempt to modify these circuits. Unauthorized modification can increase the high voltage value and cause X-ray emission from the cathode ray tube.

12. Crimp type wire connector
    In such cases as when replacing the power transformer in sets where the connections between the power cord and power transformer primary lead wires are performed using crimp type connectors, if replacing the connectors is unavoidable, in order to prevent safety hazards, perform carefully and precisely according to the following steps.

    1) **Connector part number** : E03830-001
    2) **Required tool** : Connector crimping tool of the proper type which will not damage insulated parts.
    3) **Replacement procedure**
       (1) Remove the old connector by cutting the wires at a point close to the connector.
       Important : Do not reuse a connector (discard it).

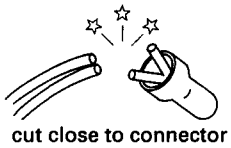

Fig.3

(2) Strip about 15 mm of the insulation from the ends of the wires. If the wires are stranded, twist the strands to avoid frayed conductors.

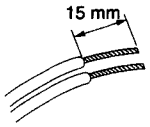

Fig.4

(3) Align the lengths of the wires to be connected. Insert the wires fully into the connector.

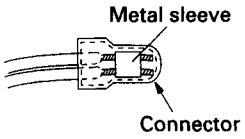

Fig.5

(4) As shown in Fig.6, use the crimping tool to crimp the metal sleeve at the center position. Be sure to crimp fully to the complete closure of the tool.

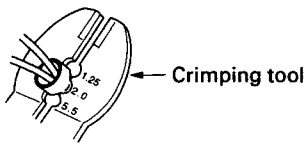

Fig.6

(5) Check the four points noted in Fig.7.

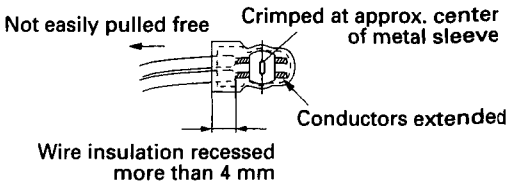

Fig.7

● Safety Check after Servicing

Examine the area surrounding the repaired location for damage or deterioration. Observe that screws, parts and wires have been returned to original positions, Afterwards, perform the following tests and confirm the specified values in order to verify compliance with safety standards.

1. **Insulation resistance test**
   Confirm the specified insulation resistance or greater between power cord plug prongs and externally exposed parts of the set (RF terminals, antenna terminals, video and audio input and output terminals, microphone jacks, earphone jacks, etc.). See table 1 below.

2. **Dielectric strength test**
   Confirm specified dielectric strength or greater between power cord plug prongs and exposed accessible parts of the set (RF terminals, antenna terminals, video and audio input and output terminals, microphone jacks, earphone jacks, etc.). See table 1 below.

3. **Clearance distance**
   When replacing primary circuit components, confirm specified clearance distance (d), (d') between soldered terminals, and between terminals and surrounding metallic parts. See table 1 below.

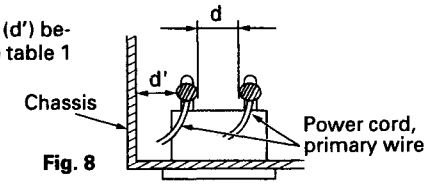

Fig. 8

4. **Leakage current test**
   Confirm specified or lower leakage current between earth ground/power cord plug prongs and externally exposed accessible parts (RF terminals, antenna terminals, video and audio input and output terminals, microphone jacks, earphone jacks, etc.).
   Measuring Method : (Power ON)
   Insert load Z between earth ground/power cord plug prongs and externally exposed accessible parts. Use an AC voltmeter to measure across both terminals of load Z. See figure 9 and following table 2.

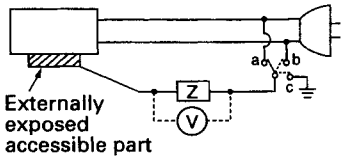

Fig. 9

5. **Grounding (Class I model only)**
   Confirm specified or lower grounding impedance between earth pin in AC inlet and externally exposed accessible parts (Video in, Video out, Audio in, Audio out or Fixing screw etc.).
   Measuring Method:
   Connect milli ohm meter between earth pin in AC inlet and exposed accessible parts. See figure 10 and grounding specifications.

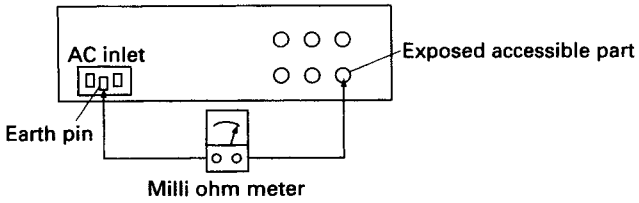

Fig. 10

Grounding Specifications

Region	Grounding Impedance (Z)
USA & Canada	Z ≦ 0.1 ohm
Europe & Australia	Z ≦ 0.5 ohm

AC Line Voltage	Region	Insulation Resistance (R)	Dielectric Strength	Clearance Distance (d), (d')
100 V	Japan	R ≧ 1 MΩ/500 V DC	AC 1 kV 1 minute	d, d' ≧ 3 mm
100 to 240 V			AC 1.5 kV 1 miute	d, d' ≧ 4 mm
110 to 130 V	USA & Canada	–	AC 1 kV 1 minute	d, d' ≧ 3.2 mm
110 to 130 V 200 to 240 V	Europe & Australia	R ≧ 10 MΩ/500 V DC	AC 3 kV 1 minute (Class II) AC 1.5 kV 1 minute (Class I)	d ≧ 4 mm d' ≧ 8 mm (Power cord) d' ≧ 6 mm (Primary wire)

Table 1 Specifications for each region

AC Line Voltage	Region	Load Z	Leakage Current (i)	a, b, c
100 V	Japan	1 kΩ	i ≦ 1 mA rms	Exposed accessible parts
110 to 130 V	USA & Canada	0.15 μF, 1.5 kΩ	i ≦ 0.5 mA rms	Exposed accessible parts
110 to 130 V 220 to 240 V	Europe & Australia	2 kΩ	i ≦ 0.7 mA peak i ≦ 2 mA dc	Antenna earth terminals
		50 kΩ	i ≦ 0.7 mA peak i ≦ 2 mA dc	Other terminals

Table 2 Leakage current specifications for each region

Note: These tables are unofficial and for reference only. Be sure to confirm the precise values for your particular country and locality.

INSTRUCTIONS (This instruction refer to the GR-DVL9000EG)

Dear Customer,
Thank you for purchasing this Digital Video Camera. Before use, please read the safety information and precautions contained in the following pages to ensure safe use of this product.

Using This Instruction Manual
- All major sections and subsections are listed in the Table Of Contents (☞ pg. 7).
- Notes appear after most subsections. Be sure to read these as well.
- Basic and advanced features/operation are separated for easier reference.

It is recommended that you . . .
.... refer to "Controls, Indications and Connectors" (☞ pg. 76 – 81) and familiarize yourself with button locations, etc. before use.
.... read thoroughly the Safety Precautions and Safety Instructions that follow. They contain extremely important information regarding the safe use of your new camcorder.

You are recommended to carefully read the cautions on pages 82 and 83 before use.

SAFETY PRECAUTIONS

CAUTIONS:
- To prevent shock, do not open the cabinet. No user serviceable parts inside. Refer servicing to qualified personnel.
- When you are not using the AC Power Adapter/Battery charger for a long period of time, it is recommended that you disconnect the power cord from AC outlet.

WARNING:
TO PREVENT FIRE OR SHOCK HAZARD, DO NOT EXPOSE THIS UNIT TO RAIN OR MOISTURE.

Warning on lithium cell battery
The battery used in this device may present a fire or chemical burn hazard if mistreated. Do not recharge, disassemble, heat above 100°C or incinerate.
Replace battery with Maxell, Panasonic (Matsushita Electronic), Sanyo or Sony CR2025; use of another battery may present a risk of fire or explosion.
- Dispose of used battery properly.
- Keep away from children.
- Do not disassemble and do not dispose of in fire.

NOTES:
- *The rating plate (serial number plate) and safety caution are on the bottom and/or the back of the main unit.*
- *The rating plate (serial number plate) of the AC Power Adapter/Charger is on its bottom.*

This camcorder is designed to be used with PAL-type colour television signals. It cannot be used for playback with a television of a different standard. However, live recording and LCD monitor/viewfinder playback are possible anywhere. Use the BN-V814U battery pack and, to recharge it, the provided multi-voltage AC Power Adapter/Charger. (An appropriate conversion adapter may be necessary to accommodate different designs of AC outlets in different countries.)

This unit is produced to comply with Standard IEC Publ. 65.

IMPORTANT:
- Never use any AC Power Adapter/Battery Charger other than the one provided with this camcorder.
- If you lose the provided AC Power Adapter/ Battery Charger or if it malfunctions, please consult your nearest JVC service dealer.

SAFETY PRECAUTIONS

Do not point the lens or the viewfinder directly into the sun. This can cause eye injuries, as well as lead to the malfunctioning of internal circuitry. There is also a risk of fire or electric shock.

CAUTION! The following notes concern possible physical damage to the camcorder and to the user.

When carrying, be sure to always attach and use the provided shoulder strap. Hold the camcorder firmly in your hand, with the strap securely around your shoulder. Carrying or holding the camcorder by the viewfinder and/or the LCD monitor can result in dropping the unit, or in a malfunction.

Take care not to get your finger caught in the cassette cover. Do not let children operate the camcorder, as they are particularly susceptible to this type of injury.

Do not use a tripod on unsteady or unlevel surfaces. It could tip over, causing serious damage to the camcorder.

Mini DV PAL

- This camcorder is designed exclusively for the Mini DV digital video cassette. Only cassettes marked Mini DV can be used with this unit.

Before recording an important scene . . .
.... make sure you only use cassettes with the Mini DV mark.
.... remember that this camcorder is not compatible with other digital video formats.
.... remember that the this camcorder is intended for private consumer use only. Any commercial use without proper permission is prohibited. (Even if you record an event such as a show, performance or exhibition for personal enjoyment, it is strongly recommended that you obtain permission beforehand.)

About Batteries
DANGER! Do not attempt to take the batteries apart, or expose them to flame or excessive heat, as there is a risk of fire or explosion.

WARNING! Do not allow the battery terminals, or the battery itself, to come in contact with metals, as this can result in a short circuit and possibly start a fire.

The Benefits Of Lithium-Ion Batteries
Lithium-ion battery packs are small but possess a large power capacity. However, when the battery pack becomes cool in an environment subject to cold temperatures (below 10°C), the battery pack has a characteristic that its usage time becomes shorter and may cease to function. If this happens, place the battery pack in your pocket or other warm, protected place for a short time, then re-attach it to the camcorder. As long as the battery pack itself is not cold, it should not affect performance.
(If you're using some kind of heating pad, make sure the battery pack does not come in direct contact with the pad.)

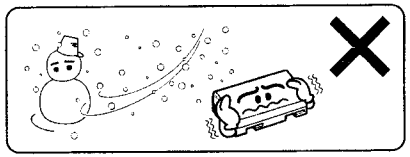

Lithium-ion is vulnerable in colder temperatures.

PROVIDED ACCESSORIES

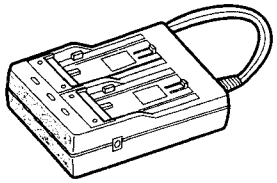

AC Power
Adapter/Charger AA-V80EG

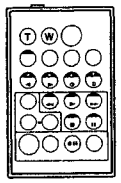

Remote control unit
RM-V711U

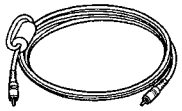

Editing cable
(ø 3.5 mini-plug, 2 poles)

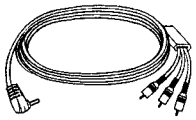

VIDEO/AUDIO cable
(camcorder to TV or VCR,
ø 3.5 mini-plug ► RCA plug)

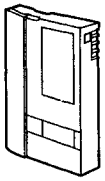

MiniDV Cassette Tape 30 min
(DVM-30) M-DV30ME

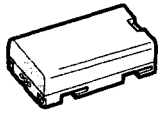

Battery pack BN-V814U

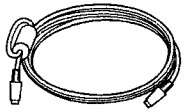

S-VIDEO cable

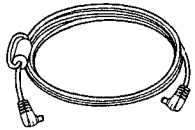

DC cord

Lithium battery CR2025 for remote
control unit (For function confirmation)

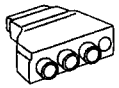

Cable adapter

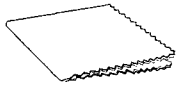

Cleaning cloth

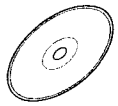

CD-ROM
The CD ROM contains
the following
3 software programmes:

- JLIP Video Capture
- JLIP Video Producer
- MGI PhotoSuite SE

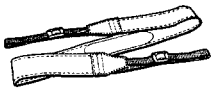

Shoulder Strap

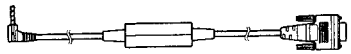

JLIP-PC connection cable

The digital video camera converts incoming audio and video signals into digital form for recording.

A video signal is composed of a luminance signal (Y) and colour signals (R-Y and B-Y). These signals are identified and recorded digitally (Digital Component Recording). The A/D (Analogue to Digital) converter samples the Y signal at 13.5 MHz, and R-Y and B-Y at 6.75 MHz, and changes them to an 8-bit quantum signal.

Sound sampled at 48 kHz is changed to a 16-bit quantum signal, and sound sampled at 32 kHz is converted to a 12-bit signal.

NOTE:

The data recorded on a tape is digital, but the output of the this camcorder is analogue.

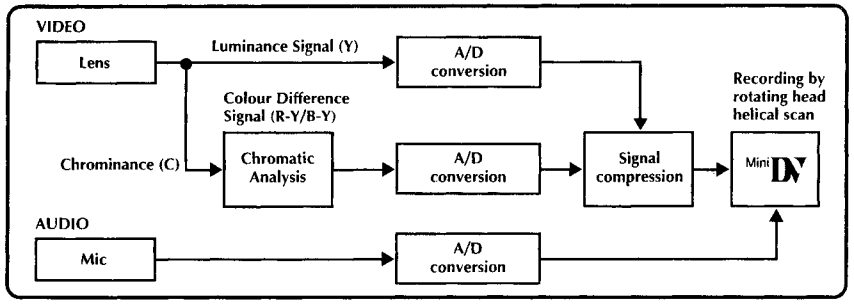

This camcorder separates the data into blocks, writing one block of each data type on each track of the tape.

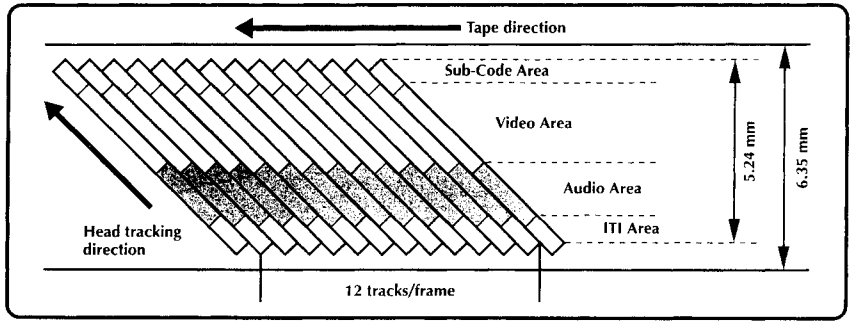

❶ Sub-Code Area

The Time Code and Date/Time data are written here, separate from the video data. This enables you to display the date and time during playback, even if they weren't displayed while recording.

❷ Video Area

The digital video signal is recorded here.

❸ Audio Area

The digital audio signal is recorded here.

❹ ITI (Insert and Tracking Information) Area

Insert editing and post-recording editing tracking signals are recorded here.

PROVIDED ACCESSORIES 4
ABOUT DV 6
GETTING STARTED 8
- Charging The Battery Pack 8
- Installing The Battery Pack 9
- Indoor Use 10
- Using The Power Pack 10
- Date/Time Settings 11
- Loading/Unloading A Cassette 12
- Recording Mode Setting 13
- Grip Strap Attachment 14
- Tripod Mounting 14
- Shoulder Strap Attachment 15
- Dioptre Adjustment 15
- Remote Control Unit 16
- Operation Mode 17

RECORDING 18
- Basic Recording 18
- Advanced Features 25

PLAYBACK 50
- Basic Playback 50
- Advanced Features 52
- Basic Connections 56
- Advanced Connections 58

EDITING 60
- Dubbing 60
- Digital Dubbing 61
- Brand Setting 62
- Random Assemble Editing 63
- For More Accurate Editing 66
- Audio Dubbing 68
- Insert Editing 69

TROUBLESHOOTING 70
AFTER USE 75
CONTROLS, INDICATIONS AND CONNECTORS 76
- LCD Monitor/Viewfinder Indications During Recording 79
- LCD Monitor Indications During Playback 80
- Warning Indications 81

CAUTIONS 82
SPECIFICATIONS 84
GLOSSARY OF TERMS 85
INDEX 86

Charging The Battery Pack

You can charge one battery pack at a time, or two consecutively.

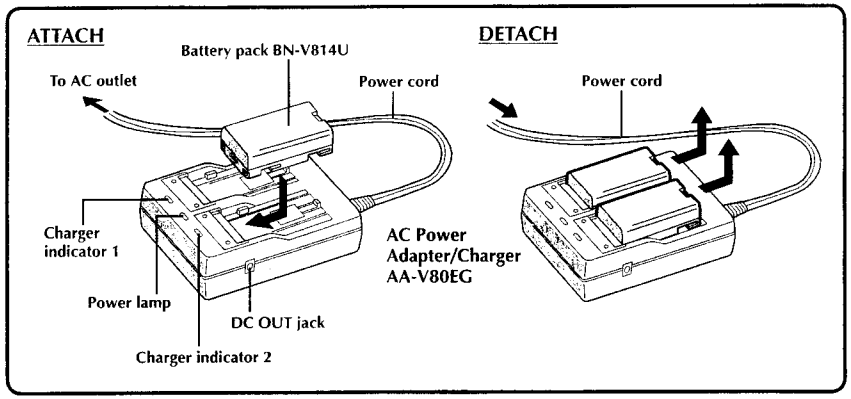

1 SUPPLY POWER TO CHARGER
Plug the AC Adapter/Charger's power cord in to an AC outlet. The power lamp comes on.

2 ATTACH BATTERY/BATTERIES
Attach while making sure the ⊕⊖ marks are facing down and aligned with the corresponding marks on the AC Power Adapter/Charger.

- The Charger Indicator (1 or 2) begins blinking to indicate charging has started.

3 CONFIRM STATUS
When the charger indicator stops blinking but stays lit, charging is finished.

- If two batteries are attached to the charger, they will be charged in the order that they were attached.

4 DETACH BATTERY/BATTERIES
Slide the battery or batteries in the direction of the arrow and lift off.

- Remember to unplug the AC Adapter/Charger's power cord from an AC outlet.

CHARGING TIME

BATTERY	ONE	TWO
BN-V814U	Approx. 110 min.	Approx. 220 min.

NOTES:

- *If you connect the camcorder's DC cord to the adapter during battery charging, power is supplied to the camcorder and charging stops.*
- *When using the AC Power Adapter/Charger, be sure to use the supplied power cord only.*
- *The AC Power Adapter/Charger is for use with the BN-V814U Battery Pack only.*
- *When charging the Battery Pack for the first time or after a long storage period, the Charger Indicator may not light. In this case, remove the Battery Pack from the AC Power Adapter/Charger, then try charging again.*
- *Since the AC Power Adapter/Charger processes electricity internally, it becomes warm during use. Be sure to use it only in well-ventilated areas.*
- *If the battery operation time remains extremely short even after having been fully charged, the battery is worn out and needs to be replaced. Please purchase a new one.*

Charging Environment
Perform charging where the temperature is between 10° and 30°C. (20° to 25°C is the ideal temperature range for charging.) If the environment is too cold, charging may be incomplete.

Continuous Shooting
Continuous shooting is possible (See table below for recording time) under the following conditions:

- A BN-V814U Battery Pack is in use
- The temperature is approximately 20°C

However, . . .

- If the temperature is below 10°C, or
- If zoom or Record-Standby are engaged or LCD monitor is used repeatedly, continuous shooting capability is reduced significantly. Before extended use, it is recommended that you prepare enough battery packs to cover 3 times the planned shooting time.

Approximate recording time (unit: min)

No. of batteries to supply power	LCD monitor off/ Viewfinder on	LCD monitor on/ Viewfinder off
Using **one** battery installed in the camcorder	100	80
Using **two** batteries; one in the camcorder and one in the Power Pack (optional) attached to the camcorder	180	140

Installing The Battery Pack

The battery pack does not charge while in the camcorder. Before installation, make sure the battery pack has been charged fully.

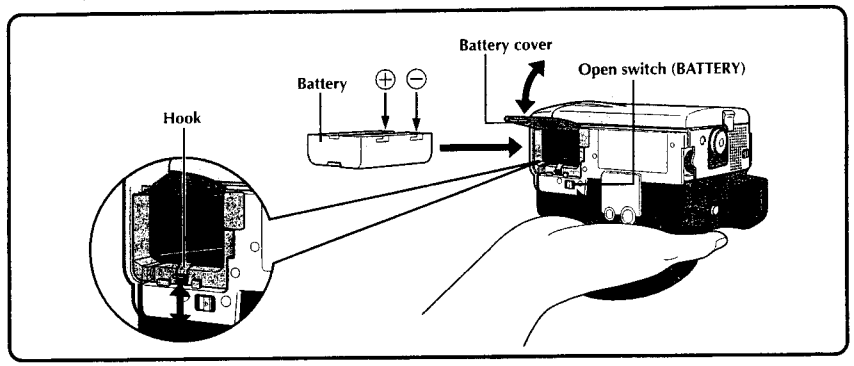

1 OPEN BATTERY COVER
Slide the open switch.

2 INSERT CHARGED BATTERY
Insert the ⊕⊖ mark end of the battery first until you hear a click. The hook rises. Inserting the battery backwards will result in malfunction.

3 CLOSE BATTERY COVER

NOTES:

- *To remove the battery, turn off the camcorder, open the battery cover and push down the hook.*
- *Be careful not to drop the battery pack.*
- *The hook is tight to prevent the battery from dropping.*

Indoor Use

When using the camcorder indoors, you can use the AC Adapter instead of a battery.

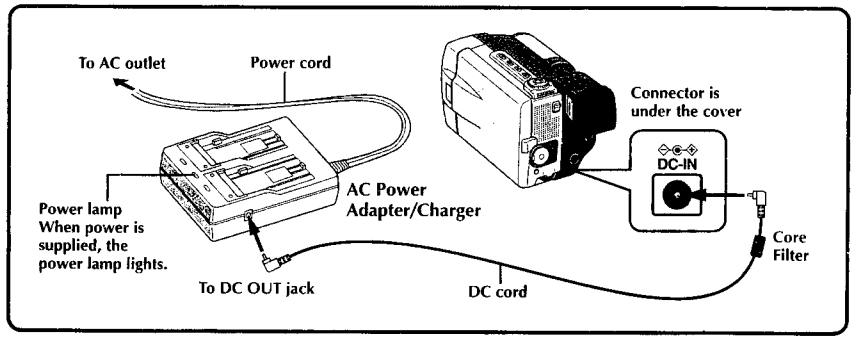

1 SUPPLY POWER TO ADAPTER
Plug the AC Adapter/Charger's power cord in to an AC outlet.

2 SUPPLY POWER TO CAMCORDER
Connect the AC Adapter to the camcorder.

NOTE:
When using the provided DC cord, make sure you connect the end of the cable with the core filter to the camcorder. The core filter improves performance of equipment.

Using The Power Pack

For extended use, prepare the optional Power Pack CU-V810, which can be loaded with one battery pack. This Power Pack can be used together with the battery installed in the camcorder.

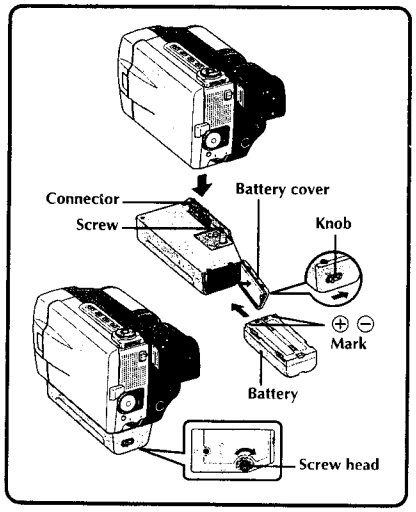

1 INSERT CHARGED BATTERY
Open the battery cover while pressing the knob and insert the ⊕⊖ end of the battery first. Close the battery cover.

2 ATTACH TO CAMCORDER
Align the connector and screw on the Power Pack while inserting the camcorder connector. Turn the spring-loaded screw head at the Power Pack's bottom inward and turn it clockwise to attach.

- To detach the Power Pack, turn the screw counterclockwise.

NOTES:
- *When the battery remaining power indicator appears as ▭, that means the battery power is close to nil. When the battery power is exhausted, power turns off automatically.*
- *Each time you start shooting, the camcorder chooses the battery pack that has more remaining power, and uses that as the power supply. That means both battery packs will be exhausted at roughly the same time.*

Date/Time Settings

Date and time will automatically be recorded on tape at all times. It is your choice to display it or not during playback (☞ pg. 54).

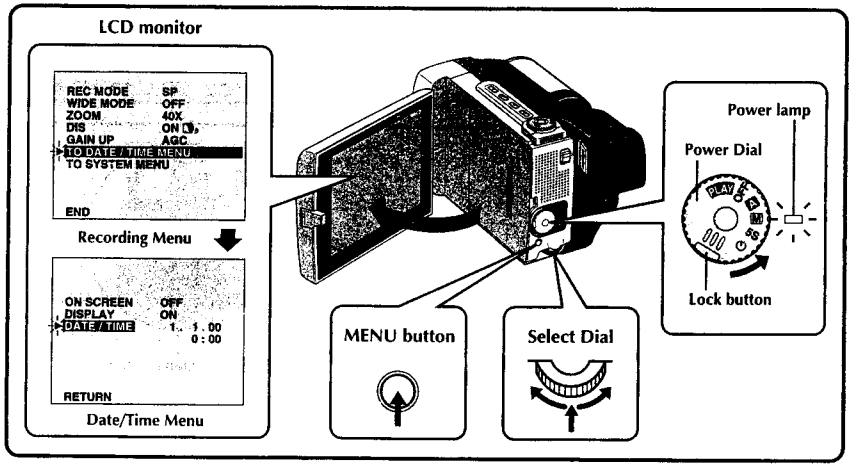

1 SELECT OPERATION MODE
Set the Power Dial to "M" while pressing down the lock button located on the dial, and open the LCD monitor fully.

- The power lamp comes on and the camcorder is turned on.
- The LCD monitor can be tilted upward up to 180 degrees and downward up to 90 degrees.

2 ACCESS RECORDING MENU
Press **MENU**. The Recording Menu appears.

3 ACCESS DATE/TIME MENU
Move the pointer and highlight bar to "TO DATE/TIME MENU" by rotating the Select Dial. Press the Select Dial and the Date/Time Menu appears.

4 INPUT DATE AND TIME
Move the pointer and highlight bar to "DATE/TIME" by rotating the Select Dial. Press the Select Dial and "day" is highlighted and begins blinking.
Rotating the Select Dial to the right or left, input the day. Press the Select Dial. Repeat the procedure to input the month, year, hour and minute.

- Press the Select Dial twice when the pointer and highlight bar are set to "RETURN" to exit.

Regarding Built-in Rechargeable Battery

To store the date/time in memory, a rechargeable clock lithium battery is integrated in the camcorder. While the camcorder is connected to an AC outlet using the AC Power Adapter/Charger, or while the battery pack installed in the camcorder continues to supply power to the camcorder, the clock lithium battery is always charged. However, if the camcorder is not used for approx. 3 months, the clock lithium battery will become discharged and the date/time stored in memory will be lost. When this occurs, first connect the camcorder to an AC outlet using the AC Power Adapter/Charger etc. for over 24 hours to charge the clock lithium battery. Then perform the date/time setting before using the camcorder.
It is also possible to use the camcorder without the date/time setting.

NOTE:
If you don't exit the Date/Time Menu, the clock display will not move but the camcorder's internal clock continues to operate. Once you close the menu, the date and time begin operation from the current date and time, with no delay or loss.

Loading/Unloading A Cassette

The camcorder needs to be powered up to load or eject a cassette.

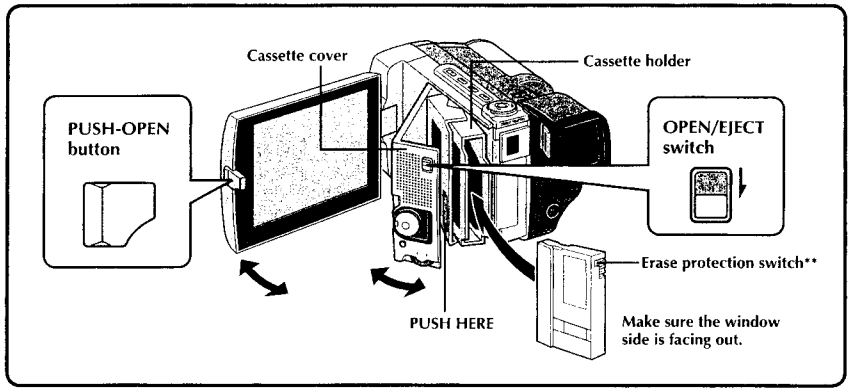

1 OPEN LCD MONITOR
Press the **PUSH-OPEN** button and open the LCD monitor up to an angle of 90 degrees.

2 OPEN CASSETTE COVER
Turn on the power, then slide the **OPEN/EJECT** switch in the direction of the arrow. The cassette cover releases. Open the cover in the direction of the arrow until it locks. The holder opens automatically.

- Do not touch internal components.

3 INSERT/REMOVE TAPE
Insert or remove a tape and press "PUSH HERE" to close the cassette holder.

- Once the cassette holder is closed, it recedes automatically. Wait until it recedes completely before closing the cassette cover.
- When the battery's charge is low, you may not be able to close the cover. Do not apply force. Replace the battery with a fully charged one before continuing.

Recording time

TAPE	Recording mode	
	SP	LP
DVM-30	Approx. 30 min.	Approx. 45 min.
DVM-60	Approx. 60 min.	Approx. 90 min.

NOTES:

- *It takes a few seconds for the cassette holder to open. Do not apply force.*
- *If you wait a few seconds and the cassette holder does not open, close the cassette cover and try again.*
- *Be careful not to get your fingers caught in the holder when it's closing. If this happens, the holder will open automatically after a few seconds.*
- *When the camcorder is suddenly moved from a cold place to a warm environment, wait a short time before opening the cover.*
- *Closing the cassette cover before the cassette holder comes out may cause damage to the camcorder.*
- *When shooting again after already shooting a scene, a blank portion is recorded on the tape or a previously recorded scene is erased (recorded over) if you open the cassette cover, regardless of whether the cassette holder comes out or not. See page 20 for information about recording from the middle of a tape.*

**** To protect valuable recordings . . .**
.... slide the erase protection switch on the back of the tape in the direction of "SAVE". This prevents this tape from being recorded over. If you decide later that you do want to record on this tape, slide the switch back to "REC" before loading the tape.

Recording Mode Setting

Set depending on your preference.

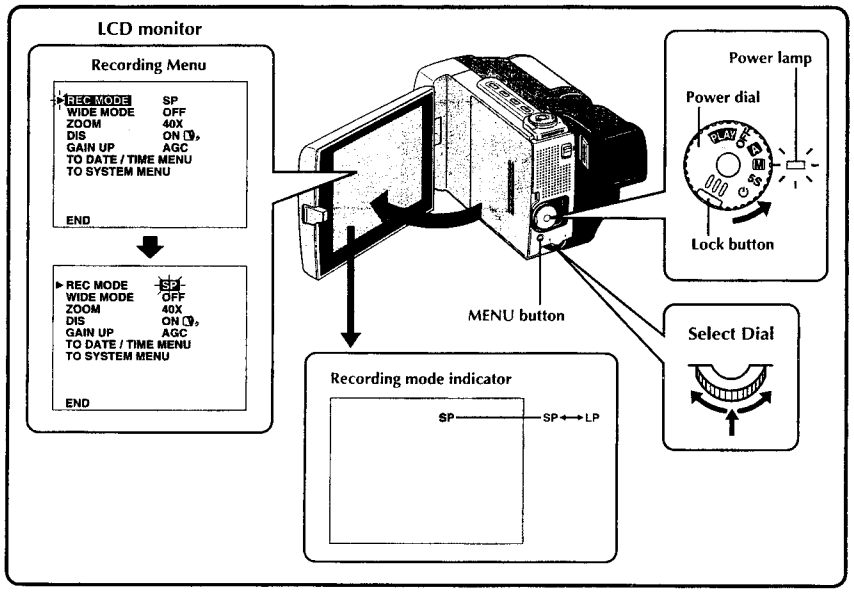

1 SELECT OPERATION MODE
Set the Power Dial to "M" while pressing down the lock button located on the dial.

2 OPEN LCD MONITOR
Open the LCD monitor fully.
The power lamp comes on and the camcorder is turned on.

- The LCD monitor turns on/off automatically when it is opened/closed at approx. 90 degrees while the Power Dial is set to any operation mode (except "OFF").
- The LCD monitor can be tilted upward up to 180 degrees and downward up to 90 degrees.

3 ACCESS RECORDING MENU
Press **MENU**. The Recording Menu appears.

4 SET RECORDING MODE
First move the pointer and highlight bar to "REC MODE" by rotating the Select Dial. Press the Select Dial and the parameter "SP" or "LP" is highlighted. Select "SP" or "LP" by rotating the Select Dial. Press the Select Dial twice to exit from the Recording Menu.

- Insert Editing or Audio Dubbing is impossible on a tape recorded in the LP mode.
- "LP" (Long Play) is more economical, recording at 2/3 the speed of "SP" (Standard Play).

NOTES:

- *If the recording mode is switched during recording, the playback picture will be blurred at the switching point.*
- *It is recommended that tapes recorded in the LP mode on this camcorder be played back on this camcorder.*
- *During playback of a tape recorded on another camcorder, blocks of noise may appear or there may be momentary pauses in the sound.*

Grip Strap Attachment

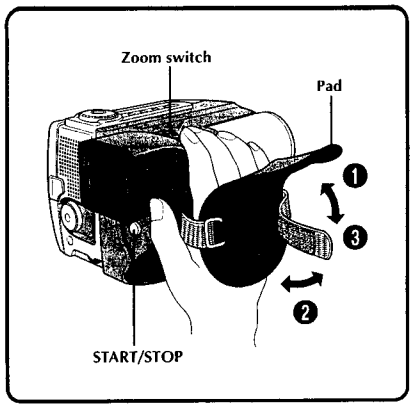

1 ADJUST LENGTH
Open the pad ❶. Adjust so your thumb and fingers can easily operate the **START/STOP** button and the zoom switch. Position the pad so that it contacts the back of your hand ❷, then re-attach it ❸.

Tripod Mounting

Align the tripod's screw with the mounting socket on the bottom of the camcorder.
The camcorder can be mounted on a tripod even with the Power Pack attached.

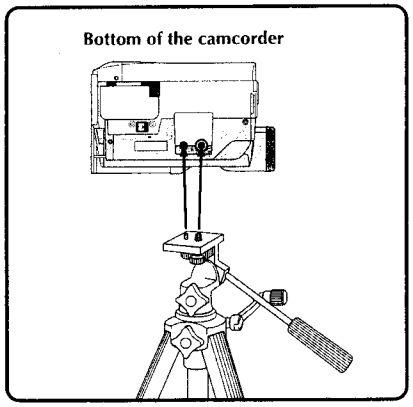

Shoulder Strap Attachment

When transporting the camcorder, it is convenient to use the shoulder strap.

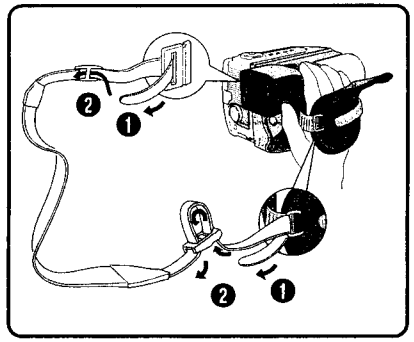

1 ATTACH SHOULDER STRAP
As shown in ❶ and ❷ of the illustration, thread the strap through the eyelets and the buckles. Pull the strap to make sure it is attached to the camcorder firmly.

- If the strap is not attached correctly and the camcorder drops, the camcorder may become damaged.

Dioptre Adjustment

Adjust the viewfinder display for best viewing.

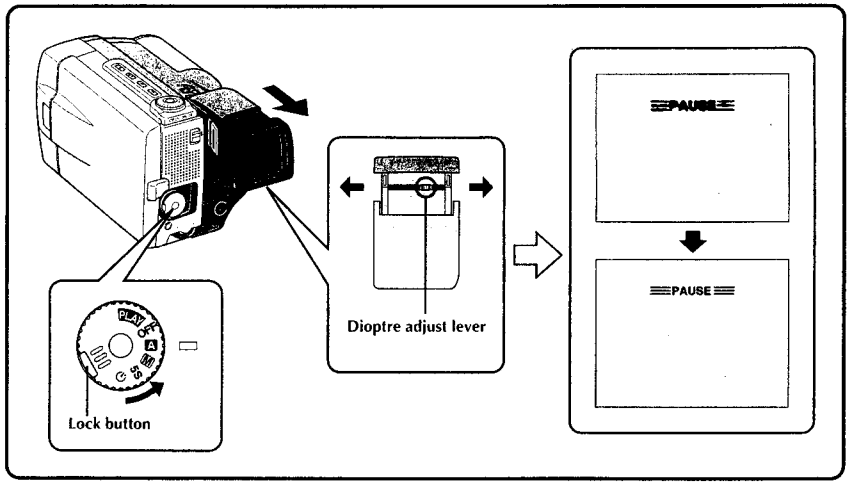

1 SELECT OPERATION MODE
Set the Power Dial to "A" or "M".

2 TURN ON CAMCORDER
Pull out the viewfinder fully.

3 ADJUST DIOPTRE
Slide the dioptre adjust lever located on the bottom of the viewfinder.

- Slide in either direction, while looking at the viewfinder display, until it looks best to you.

Remote Control Unit

You can use the RM-V711U to control the camcorder. When using the remote control, be sure to point it at the remote sensor. The transmitted beam effective area for indoor use is approx. 5 m. The transmitted beam may not be effective or may cause incorrect operation if the remote sensor is directly exposed to sunlight or powerful lighting.

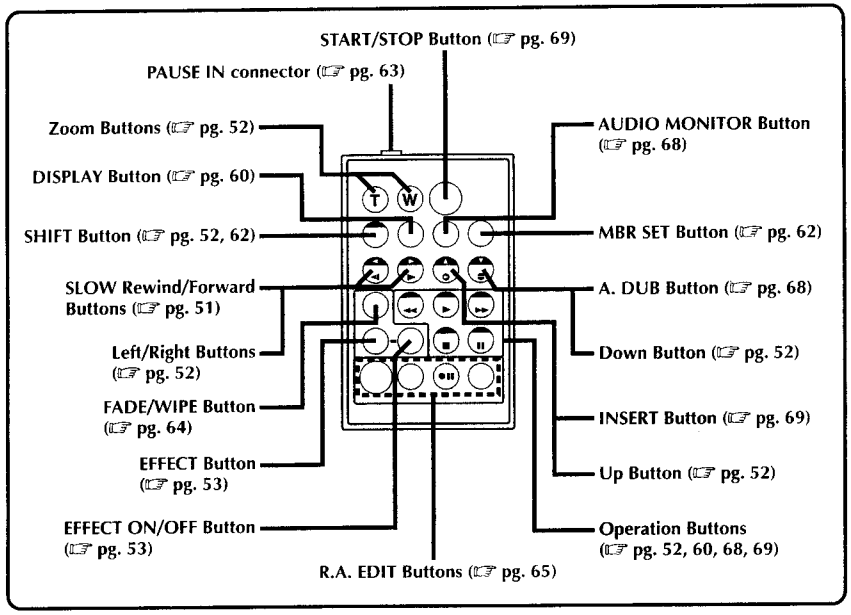

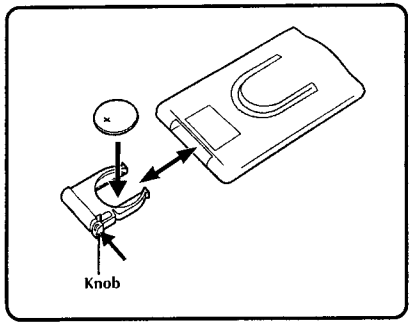

Installing The Battery

The RM-V711U uses one lithium battery (CR2025).

1 PULL OUT BATTERY HOLDER
Pull out in the direction of the arrow while pressing the knob as shown.

2 INSERT BATTERY IN HOLDER
Insert the battery in the holder, and be sure to have the "+" mark visible.

3 RE-INSERT HOLDER
Slide the holder back in until you hear a click.

- Read the caution concerning lithium batteries (☞ pg. 2).

Operation Mode

Tuning the Power Dial allows you to choose the appropriate operation mode among the following modes: Full Auto mode (A), Manual mode (M), 5 second mode recording (5S), Self-Timer mode (⏲) and "PLAY".

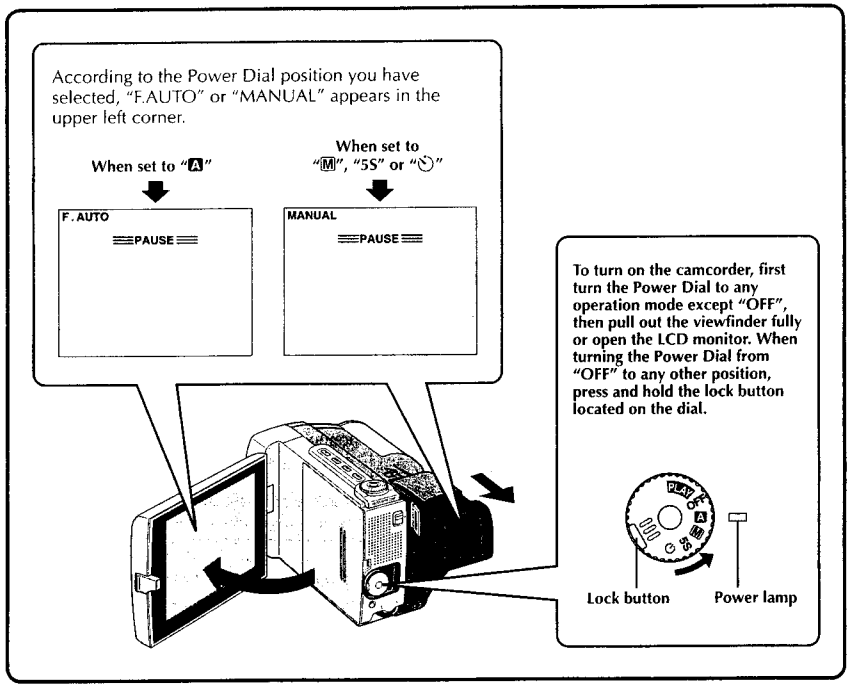

Power Dial Position	Function
Full Auto: A	Allows you to record using NO special effects or manual adjustments. Suitable for standard recording.
Manual: M	Allows you to set various recording functions using the Menus. If you want more creative capabilities than Full Auto recording, try this mode.
5 second mode recording: 5S	Allows you to record in 5-second clips to keep the action moving. Other menu settings are the same as Full Auto mode, however manually adjusted White Balance Adjustment settings are effective.
Self-Timer: ⏲	Allows you (camcorder operator) to become part of the scene once the camcorder is set. This mode is similar to the Self-Timer on film cameras.
Playback: PLAY	Allows you to play back a recording, ☞ pg. 50 – 59.
OFF	Allows you to switch off the camcorder. When set to this position, Manual Focus and Exposure Control are automatically set to "AUTO".

You should already have performed the necessary preparations (☞ pgs. 8 – 17). Set the Power Dial to "A" and try recording that way before attempting to use more advanced features.

NOTE:

Before starting recording, make sure you set the date and time (☞ pg. 11). Even if they don't appear during recording, you can display them during playback (☞ pg. 55).

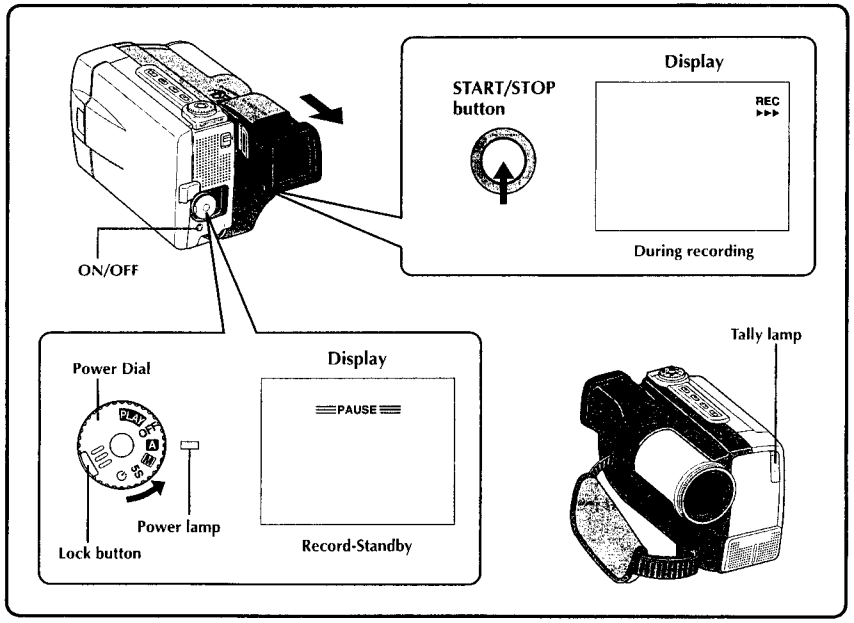

1 SELECT OPERATION MODE

Set the Power Dial to "A" while pressing down the lock button located on the dial.

2 PULL OUT VIEWFINDER OR OPEN LCD MONITOR

Pull out the viewfinder fully or open the LCD monitor to approx. 90° degrees.

- The lens cover opens, the power lamp comes on and the scene you're aimed at appears.
- The Record-Standby mode is engaged.

3 START RECORDING

When "PAUSE" appears, press **START/STOP**. A beep signals the start of recording and the tally lamp comes on.

4 STOP RECORDING

Press **START/STOP** again to stop recording.

- The camcorder re-enters Record-Standby mode.

5 END RECORDING

When you're finished recording, push back the viewfinder or close the LCD monitor until it clicks; the lens cover closes and the power lamp goes out.

- When transporting, make sure the viewfinder is pushed back and the LCD monitor is closed and locked.
- To turn power on again, pull out the viewfinder or open the LCD monitor.

OR

Set the Power Dial to "OFF".

- When turning to "OFF", it is not necessary to press down the lock button.

NOTES:

- *The image will not appear simultaneously in the LCD monitor and the viewfinder. No image appears on the LCD monitor when the viewfinder is pulled out. It is not possible to shoot using both LCD monitor and viewfinder. However, during Interface Shooting (☞ pg. 23) the image appears simultaneously in the LCD monitor and the viewfinder.*
- *If 5 minutes elapse in the Record-Standby mode, power shuts off automatically to conserve energy and protect the heads. To turn the camcorder on again, push back and pull out the viewfinder again or close and re-open the LCD monitor. As long as you don't take out the tape you were using or play it back, you can continue from where you left off with no noticeable brake on the recorded video.*
- *When a blank portion is left between recorded scenes on the tape, the time code is interrupted and errors may occur when editing the tape. Continue recording from where you stop so there are no gaps by following "Recording from the middle of a tape" (☞ pg. 20).*
- *Record-Standby means that a tape is loaded and the camcorder is ready to record.*
- *During recording, sound is not heard from the speaker. If you want to hear the sound, connect optional headphones to the headphones jack. The sound volume at this point is the same as the level it was adjusted during playback.*
- *To make the indications disappear, press and hold the **ON/OFF** button for more than approx. 1 second. However, it is impossible to remove the tape running indicator "▶▶▶" and warning indications and so on (☞ pg. 81).*
- *Use the viewfinder when under direct sunlight or when reflections make it difficult to see the LCD monitor.*

Recording From The Middle Of A Tape

When removing a tape on which you were recording, or when you resume recording on a tape after playing back the recording previously made (without taking the tape out between recordings), perform this procedure.

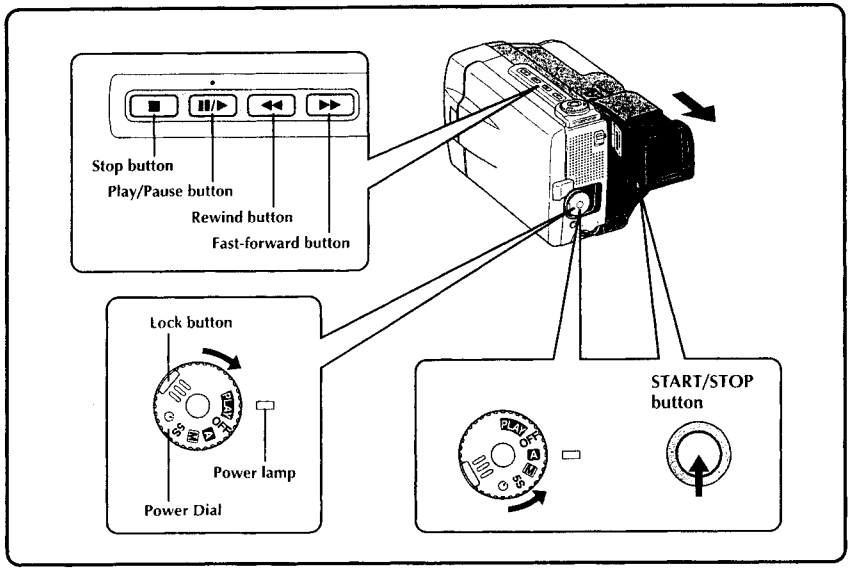

1 SELECT OPERATION MODE
Turn the Power Dial to "PLAY" while pressing down the lock button located on the dial.

- The power lamp comes on.

2 PULL OUT VIEWFINDER OR OPEN LCD MONITOR
Pull out the viewfinder fully or open the LCD monitor to approx. 90° degrees.

3 START SEARCH
Press ▶/II, then press ◀◀ or ▶▶. Watch in the viewfinder or the LCD monitor for the spot where you want to begin recording.

4 ENGAGE STILL MODE
Once you find the spot at which you want to start recording, press ▶/II twice to engage the Still mode.

5 START RECORDING
Turn the Power Dial to any operation mode except "PLAY" and "OFF", then press **START/STOP**.

- Start recording from a point prior to the end of the last recording. A few seconds of the end of the last recording will be erased.

NOTE:
If you start recording from the end of the previous recording leaving no blank space, there may be situations where a clean transition is not possible.

Time Code

During recording, a time code is recorded on the tape. This code is to confirm the location of the recorded scene on the tape during playback.
If recording starts from a blank portion, the time code begins counting from "00:00:00" (minute:second:frame). If recording starts from the end of a previously recorded scene, the time code continues from the last time code number.

To perform Random Assemble Editing (☞ pg. 63), time code is necessary. If during recording a blank portion is recorded partway through the tape, the time code is interrupted. When recording is resumed, the time code starts counting up again from "00:00:00". This means the camcorder may record the same time codes as those existing in a previously recorded scene. To prevent leaving a blank portion on a tape, perform the procedure in "Recording From The Middle of A Tape" (☞ pg. 20) in the following cases;

- After playing back the recorded tape, when you shoot again.
- When power shuts off during shooting.
- When a tape is removed and re-inserted during shooting.
- When shooting using a partially recorded tape.
- When shooting on a blank portion located partway through the tape.
- When shooting again after already shooting a scene and opening/closing the cassette cover.

Display

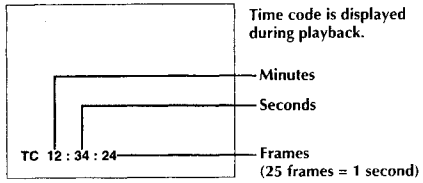

NOTES:
- *The Time Code cannot be reset.*
- *During fast-forwarding and rewinding, time code indication does not move smoothly.*

When blank portion is recorded on a tape

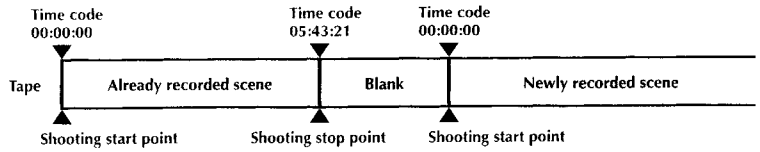

Proper recording

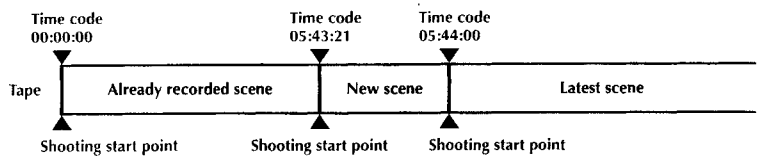

Tape Remaining Indicator

The time remaining on the tape is automatically monitored and displayed (☞ pg. 79). When the tape ends, "TAPE END" appears. If the indications are turned off, the tape remaining indicator appears when remaining time reaches 2 minutes.

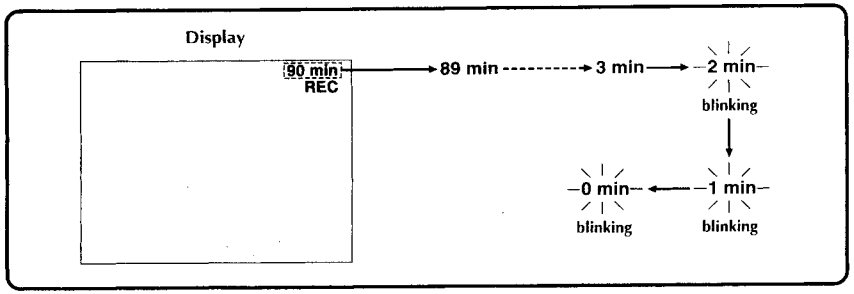

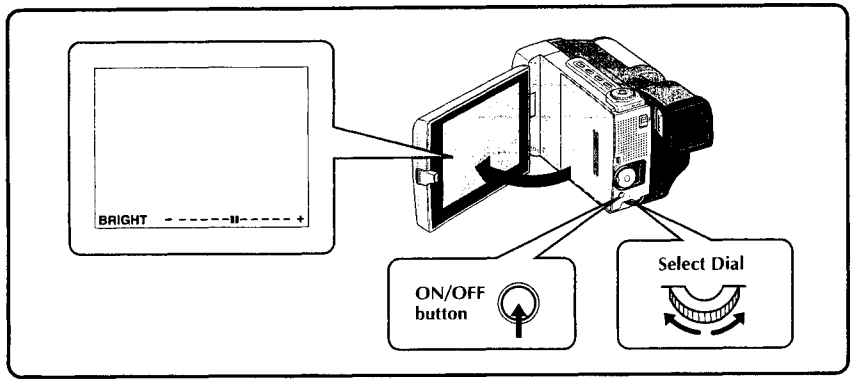

Brightness Control

You can adjust the brightness of the LCD monitor by rotating the Select Dial.

1 ADJUST BRIGHTNESS
Rotate the Select Dial to the right or left until the brightness indicator moves and the LCD monitor reaches its appropriate brightness.

- The brightness indication appears in the LCD monitor.

LCD Monitor/Viewfinder Indications

You can make the LCD monitor/Viewfinder indications appear/disappear.

1 PRESS ON/OFF BUTTON
When you do not want the indications to appear, press the **ON/OFF** button for longer than approximately 1 second. Certain indications disappear.
Press again for longer than approx. 1 second to make the indicaitons reappear.

NOTE:
It is impossible to make the tape running indicator and warnings etc. disappear from the LCD monitor or the viewfinder. For the indications that can be removed, ☞ pg. 79.

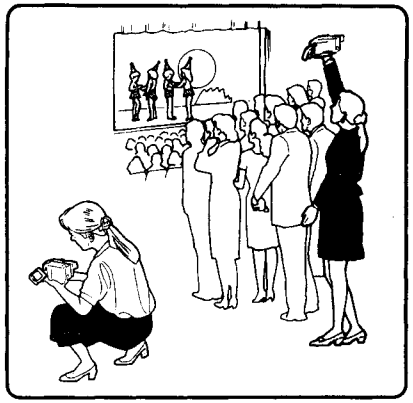

Journalistic shooting

In some situations different angles of shooting may be required for more dramatic results.

1 OPEN LCD MONITOR
Make sure the viewfinder is pushed back and the LCD monitor is fully open (approx. 90°).

2 TILT LCD MONITOR
Tilt the LCD monitor in the most convenient direction.

- The LCD monitor can rotate almost full circle (270°: 90° downward, 180° upward).

Interface Shooting

The person you are shooting can view himself/herself in the LCD monitor, and you can even shoot yourself while viewing your own image in the LCD monitor.

1 TILT LCD MONITOR UPWARD
Open the LCD monitor and tilt it upward to 180 degrees so that it faces forward.

2 START RECORDING
Point the lens towards the subject (yourself when self-recording) and start shooting.

- During Interface Shooting, the "Tape Running" indicator and warning indications (☞ pg. 81) are the only ones that are shown; they appear reversed in the display as they would when viewing a mirror, but are not reversed in the recording.

NOTE:
The tape remaining indicator does not appear during interface shooting. However, when the remaining time reaches 2 minutes, the indicator appears showing the remaining time: (blinking) → (blinking) → (blinking)

Zoom

Select any one of the three powers of magnification and get "closer" to the subject (☞ pg. 33).

Simply set the zoom switch to either zoom in (towards "T") or zoom out (towards "W"). The zoom speed is variable — the quicker you set the zoom switch, the quicker the zoom action.

NOTES:

- *Zoom magnification of over 10X is done through Digital image processing, and is therefore called Digital Zoom.*
- *During Digital Zoom, the quality of image may suffer.*
- *Digital zoom cannot be used while the Video Echo effect (☞ pg. 43), the Picture Wipe/Dissolve function (☞ pg. 38) or the 5SD mode (☞ pg. 26) are activated.*
- *Macro shooting (as close as approx. 1.5 cm to the subject) is possible when the zoom switch is set all the way to "W".*

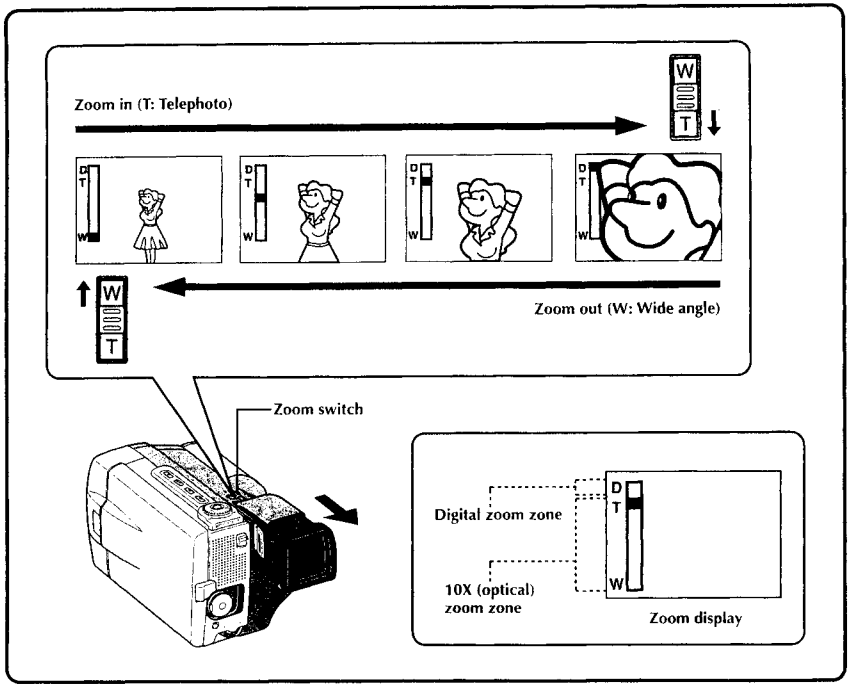

Displaying The Date And Time During Recording

When the Power Dial is set to "M", "5S" or "", you can choose whether to display the date and time during recording or not. You must first set the date and time (see "Date/Time Settings" ☞ pg. 11). Set "DISPLAY" to "ON" in the Date/Time Menu. The Date/Time is always displayed when the Power Dial is set to "A".

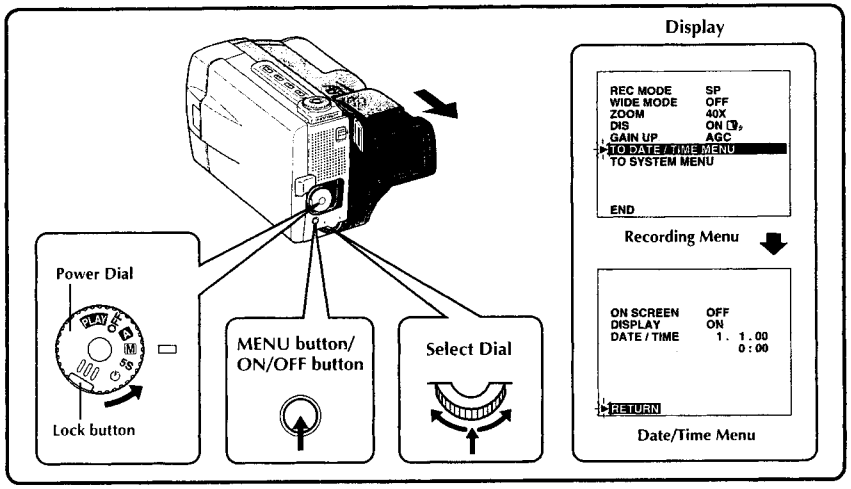

1 SELECT OPERATION MODE
First turn the Power Dial to "M" while pressing down the lock button located on the dial, make sure the LCD monitor is open fully or the viewfinder is pulled out.

2 ACCESS RECORDING MENU
Press **MENU**. The Recording Menu appears.

3 ACCESS DATE/TIME MENU
Move the pointer and highlight bar to "TO DATE/TIME MENU" by rotating the Select Dial. Press it and the Date/Time Menu appears.

4 SELECT FUNCTION
Move the pointer and highlight bar to "DISPLAY" by rotating the Select Dial, then press it. The pointer stops blinking, indicating that the function has been selected.

5 SET FUNCTION PARAMETERS
Cycle through the available settings of the selected functions by rotating the Select Dial and stop when the one you want is displayed. Then press it and the pointer and highlight bar automatically move to "RETURN".

6 CLOSE RECORDING MENU
Press the Select Dial twice. Selection is complete and the menu disappears.

NOTES:

- *Connect the camcorder to a TV and set "ON SCREEN" to "ON" in the Date/Time Menu. The display appears on the connected TV.*
- *The Indicator/Display function overrides these settings. Even if you have set "ON SCREEN" to "ON", pressing the **ON/OFF** button for longer than 1 second removes the indications from the screen. Pressing it for longer than 1 second again makes the indications re-appear.*

Scene (5-second recording)

Record a vacation or an important event in 5-second clips to keep the action moving. The 5-Second function may also be activated during Full Auto operation. But the White Balance remains in the previously adjusted condition. While the 5-Second mode is activated, Fade/Wipe (☞ pg. 36), P.AE/Effects (☞ pg. 42) and other manual operations cannot be performed.

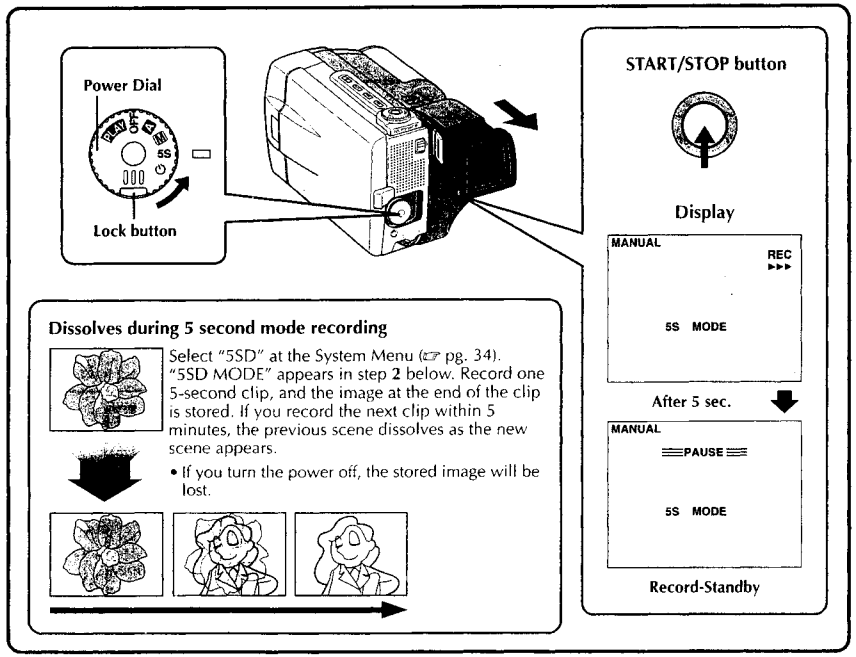

1 SELECT OPERATION MODE
Turn the Power Dial to "5S" while pressing down the lock button located on the dial.

2 PULL OUT VIEWFINDER OR OPEN LCD MONITOR
Pull out the viewfinder fully. "5S MODE" appears.

3 ENGAGE 5S MODE
Then press **START/STOP**. The tally lamp lights and beep sounds to indicate the start of recording, and after 5 seconds the camcorder enters Record-Standby mode.

• If you press and hold **START/STOP** within 5 seconds after recording starts, Record-Standby mode is not engaged.

4 END 5-SECOND MODE RECORDING
Set the Power Dial to the "A", "M" or "OFF" position.

To Take A Snapshot In The 5-Second Mode . . .
.... turn the Progressive Dial to any Snapshot mode and instead of pressing **START/STOP** in step **3**, press the Progressive Button. The camcorder records a 5-second still with the shutter sound (☞ pg. 28). But when the Scene is set to animation (☞ pg. 35) this function is not available.

NOTE:
When "SCENE" is set to "ANIM." in the System Menu, the 5-second recording funcion is not available. Animation recording of a 1/8-second clip is taken instead (☞ pg. 35).

Self-Timer

Once the camcorder is set, the camcorder operator can become part of the scene in a more natural way adding the final touch to a memorable picture.

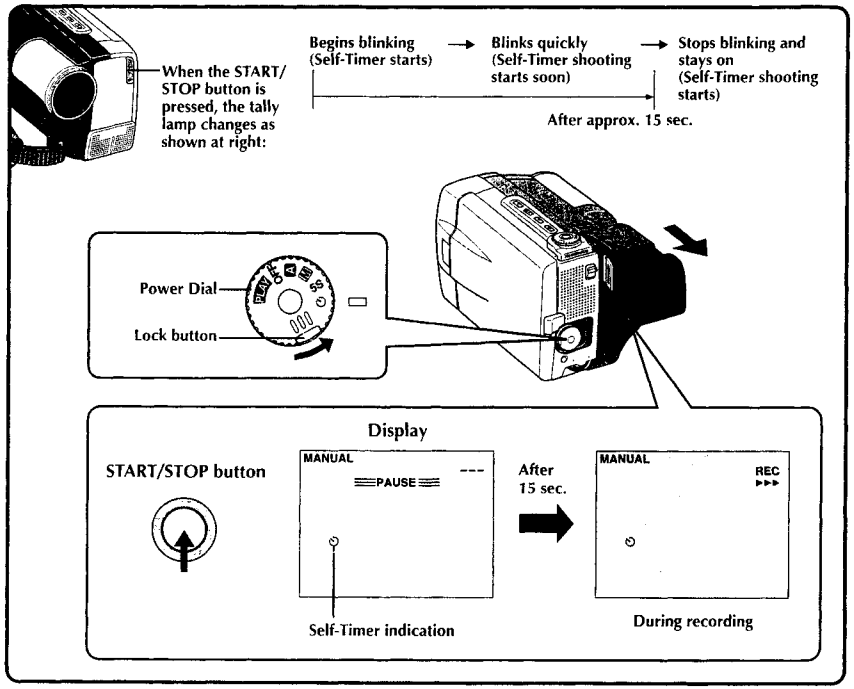

1 SELECT OPERATION MODE
Turn the Power Dial to "⏲" while pressing down the lock button located on the dial.

2 PULL OUT VIEWFINDER OR OPEN LCD MONITOR
Pull out the viewfinder fully.

• The camcorder enters the Record-Standby mode.
• You can tilt the LCD monitor upward to 180 degrees so that it faces forward and view yourself while self-recording (with the viewfinder pushed back).

3 ENGAGE SELF-TIMER MODE
Press **START/STOP**.

4 STOP SELF-TIMER RECORDING
Press **START/STOP**.

• The camcorder re-enters Record-Standby mode.

5 END SELF-TIMER RECORDING
Set the Power Dial to the "A", "M" or "OFF" position.

• When turning to "OFF", it is not necessary to press down the lock button.

To Take A Snapshot In The Self-Timer Mode . . .
.... in step **3**, turn the Progressive Dial to any Snapshot mode, then press the Progressive Button (☞ pg. 28). After approx. 15 seconds, a snapshot will be taken.

NOTE:
When the Progressive Dial is set to "VIDEO", the Self-Timer records using the Progressive Mode.

Pro Snapshot

Use your camcorder like a regular camera and take a snapshot, or several of them in succession.

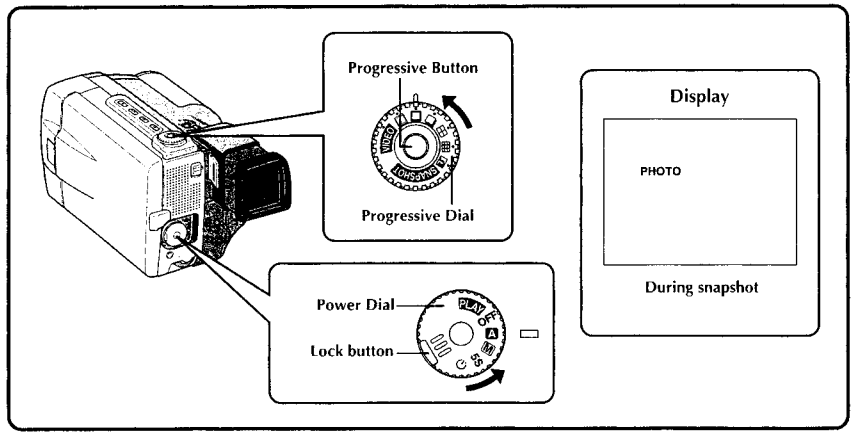

1 SELECT OPERATION MODE

First turn the Power Dial to "A" or "M" while pressing down the lock button located on the dial. Make sure the viewfinder is pulled out or the LCD monitor is open fully.

2 SELECT PRO SNAPSHOT MODE

Choose the appropriate mode among six Pro Snapshot modes (☞ pg. 29) by turning the Progressive Dial (**SNAPSHOT** Dial).

3 TAKE PRO SNAPSHOT

Press the Progressive Button (**SNAPSHOT** Button).

If you press during Record-Standby . . .

.... "PHOTO" appears and a still image will be recorded for approx. 6 seconds, then the camcorder re-enters the Record-Standby mode.

If you press during Recording . . .

.... "PHOTO" appears and a still image will be recorded for approx. 6 seconds, then the normal recording resumes.

To Perform Pro Snapshot Recording During Progressive Video Recording (☞ pg. 44) . . .

.... turn the Progressive Dial to the Pro Snapshot mode you want, then press the Progressive Button. To end recording, set the Progressive Dial to "VIDEO" again, then press the Progressive Button.

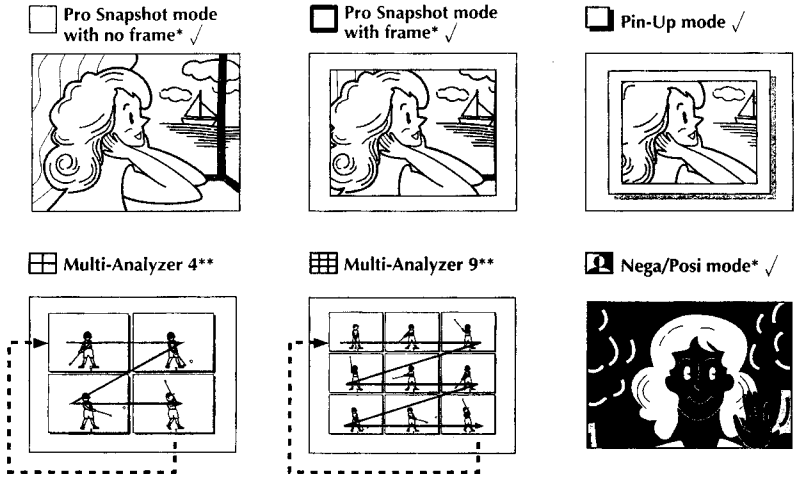

* : There is a momentary camera shutter-type blackout together with the sound effect of a shutter closing, which is recorded together with the image.

** : This will be disabled when P.AE/Effects other than "SHUTTER" are activated.

√ : Recorded with Progressive mode.

Motor Drive mode:

Keeping the Progressive Button pressed provides an effect similar to serial photography. (The interval between the still pictures: approx. 0.7 seconds.)

To Remove The Shutter Sound . . .

.... When you don't want to hear the shutter sound, set BEEP/TALLY to "OFF" in the system menu (☞ pg. 35). Though the sound is not heard from the speaker, it is recorded on the tape.

Progressive Mode:

This mode enables recording a jitter-free still image with superior quality, using the Progressive Scan CCD (☞ pg. 30).

The Progressive Mode is activated during Pro Snapshot recordings (except Multi-Analyzer 4 & 9) and Progressive Video Recording (☞ pg. 44).

A recorded high-resolution still image can be transferred to a personal computer and processed using the provided software, or can be printed out using the optional digital printer GV-DT1.

NOTE:

During playback as well, all Pro Snapshot modes except Nega/Posi mode are available. The shutter sound is not heard.

Description of Progressive Scan CCD

Progressive Scan is a special image sensing method which, unlike conventional interlace scanning, is able to pick up all the lines of picture information in one Scan. Since the Progressive Scan CCD is capable of outputting 50 full Frames* per second — twice the amount of conventional systems — it is able to deliver a high quality picture even when its output signal is converted to a format that can be viewed on a TV screen.

*A PAL TV screen image is composed of 25 Frames per second. 1 Frame is made up of 2 Fields.

1. Regular shooting of moving images

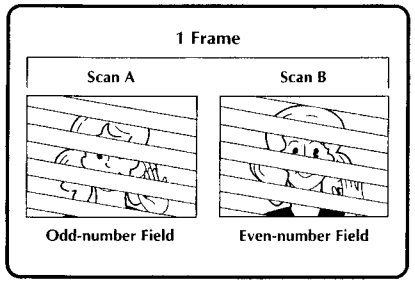

Records 25 odd and 25 even image Fields, for a total of 50 per second. Since there is a time lag between an odd and even Field, when they are combined to make 1 Frame the part of the image that is moving appears as image jitter. **However, during normal playback, the moving picture looks smooth and natural.**

2. Progressive mode shooting of moving images (Progressive Video Recording ☞ pg. 44)

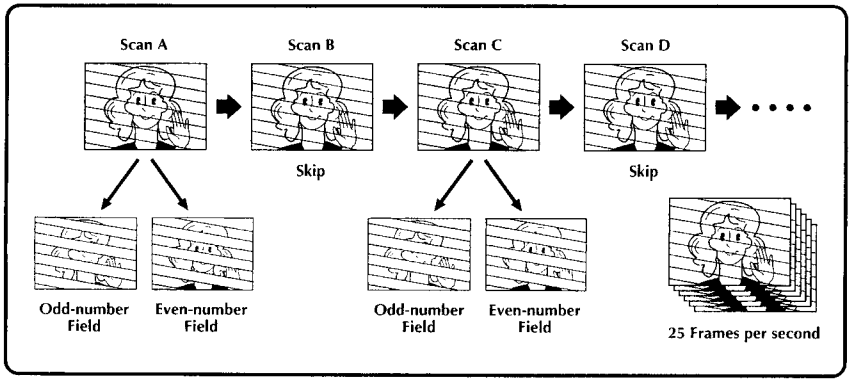

Scan A is recorded, divided into an odd- and even-number Field, and then Scan B is skipped. Scans C and D are handled in the same way as Scans A and B, as illustrated above, thereby recording 25 Frames per second.

Since each recorded odd- and even-number Field originates from the same Scan there is no time lag between them, and so when they are combined into a Frame and **a still image is displayed on a TV or PC monitor the picture does not look jittery. However, when moving images are played back, the picture can look unnatural.**

3. Pro Snapshot recording (☞ pg. 28)

When the Progressive button is pressed, the current frame will be recorded for about 6 seconds in the Progressive mode (except when a Multiple picture mode is being used).

Menus

The Recording Menu allows you to set these functions:
Recording Mode, Wide Mode, Zoom Magnification, Digital Image Stabilizer, Gain Up, Date/Time Menu, System Menu. The following selection procedure applies to *Recording Mode, Wide Mode, Zoom Magnification, Stabilization and Gain Up.*
Please refer to pages 32, 33 for details.

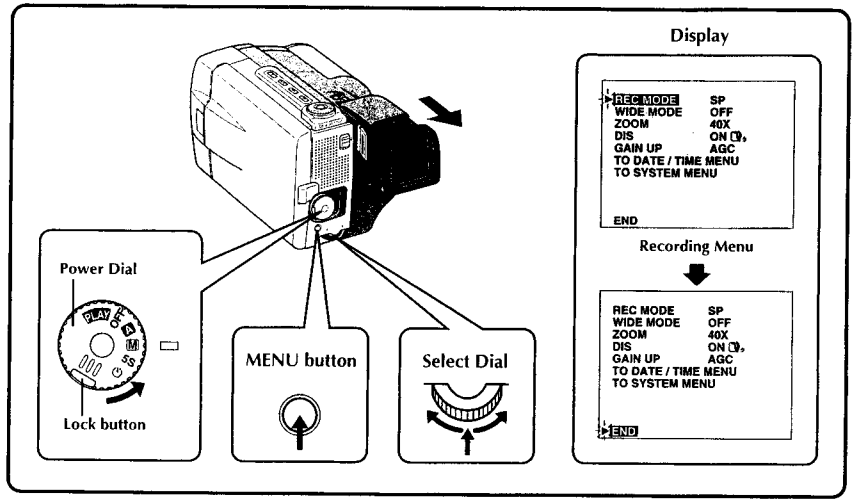

1 SELECT OPERATION MODE
First turn the Power Dial to "M", "5S" or "⏲" while pressing down the lock button located on the dial, make sure the LCD monitor is open fully or the viewfinder is pulled out.

2 ACCESS RECORDING MENU
Press **MENU**. The Recording Menu appears.

3 SELECT FUNCTION
Move the pointer and highlight bar to the desired function by rotating the Select Dial, then press it. The pointer stops blinking, indicating that the function has been selected.

4 SET FUNCTION PARAMETERS
Cycle the available settings of the selected function by rotating the Select Dial. Stop when the one you need is displayed. Then press it, the pointer and highlight bar automatically move to "END".

- To set the parameters for a different function, repeat steps **3** and **4**.

5 CLOSE RECORDING MENU
Press the Select Dial. Selection is complete and the menu disappears.

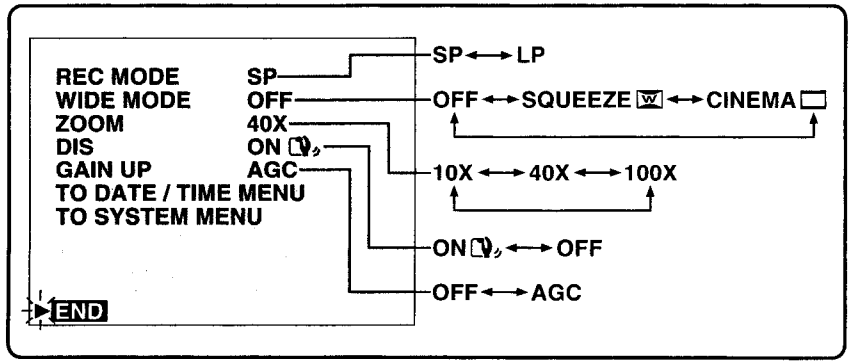

REC MODE (Recording mode)

You can change the tape recording speed. LP tape speed is slower than SP, allowing LP to record 1.5 times longer than SP. If you have shot in SP mode Audio Dubbing and Insert Editing will be possible later.

NOTE:

Tapes shot in LP mode are recommended to be played back on this unit. Playback may not be successful on other units.

WIDE MODE

This recording mode is compatible with wide-screen TVs (16:9 aspect ratio). When using this mode, please refer to your wide-screen TV's instruction manual.

SQUEEZE –For playback on TVs with an aspect ratio of 16:9. Naturally expands the image to fit the screen without distortion. appears. During playback/recording on 4:3 TVs/LCD monitor/viewfinder, the image is elongated vertically.

CINEMA –Inserts black bands at the top and bottom of the screen. During playback on wide-screen TVs, the black bands at the top and bottom of the screen are cut and the screen ratio becomes 16:9. During playback/recording on 4:3 TVs/LCD monitor/viewfinder, black bands are inserted at the top and bottom of the screen and the image appears like a letterboxed 16:9 movie.

OFF–Select "OFF" when you don't want to use either of the above modes.

A discriminating signal is automatically recorded when you select either "SQUEEZE" or "CINEMA" for recording. If your wide TV has the automatic discriminating function, connect an S-Video cable between S2 connector on the TV and the S-Video output connector on the camcorder. During playback, the image is naturally expanded to fit the wide screen, with no proportional distortion.

If your wide screen TV has no S2 connector, automatic signal discrimination can not be performed, and it should be done manually.

NOTES:

- *When playing back through a video cassette recorder, or to a wide-screen TV, that does not have the automatic discriminating function, change the setting on the TV manually.*
- *When playing back a tape recorded in Squeeze and Cinema, Squeeze cannot be distinguished from Cinema during fast-forward or rewind.*
- *During Full-Auto operation, both Squeeze and Cinema modes are unusable.*

ZOOM (Zoom magnification)

You can select 10X, 40X, or 100X maximum zoom magnifications.

10X–Optical zoom that does not degrade the quality of the recording.
40X–Electronic processing (Digital zoom) that lets you get closer up.
100X–Electronically-processed images at 100-times magnification.

NOTES:

- *Even if 40X or 100X is selected, Digital zoom (magnification of over 10X) cannot be used while the Video Echo effect (☞ pg. 43), the Picture Wipe/Dissolve function (☞ pg. 38) or the 5SD mode (☞ pg. 26) are activated.*
- *During Full-Auto mode, 40X is selected automatically.*

DIS (Digital Image Stabilizer)

When recording while holding the camcorder in your hand, or when shooting a subject with little or no contrast, subtle hand movements will cause shakiness in the recorded image.

ON –Compensates for relatively small shakes that occur when shooting close up. "" appears during recording.
OFF–When shooting with the camcorder in a fixed position or on a tripod, set the Stabilizer to "OFF". If you leave it on and then move or turn the camera to follow a moving subject, unnecessary compensation occurs and this can result in an unnatural recorded image.

NOTES:

- *Even if the stabilizer is set to "OFF" in Manual mode, it is automatically set to "ON" in Full Auto Mode.*
- *The Stabilizer cannot compensate for drastic hand movements while shooting.*
- *The Stabilizer will not work if the scene has little or no contrast.*
- *The "" indicator appears blinking if the Stabilizer cannot be used.*

GAIN UP

Bright, natural recordings can be taken even in areas with low or poor lighting.

AGC–This is the factory setting, and is automatically activated during Auto operation. The overall appearance is jagged, but the image is bright.
OFF–Select this setting when lighting is not a problem. Enables recording of the actual brightness you see.

System Menu

The System Menu allows you to set the following functions: Scene, Beep/Tally, Wind Cut, Sound Mode and ID numbers.

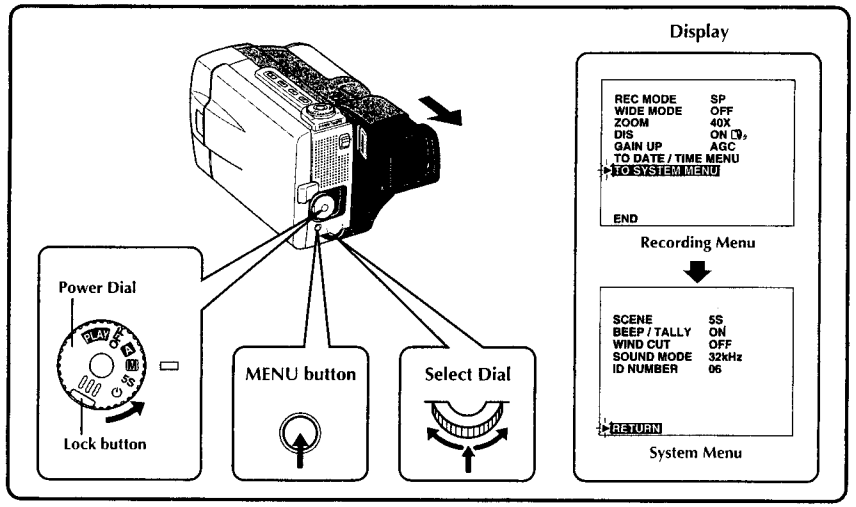

1 SELECT OPERATION MODE
First turn the Power Dial to "M", "5S" or "⏲" while pressing down the lock button located on the dial, make sure the LCD monitor is open fully or the viewfinder is pulled out.

2 ACCESS RECORDING MENU
Press **MENU**. The Recording Menu appears.

3 ACCESS SYSTEM MENU
Move the pointer and highlight bar to "TO SYSTEM MENU" by rotating the Select Dial, then press it. The System Menu appears.

4 SELECT FUNCTION
Place the pointer and highlight bar to the desired function by rotating the Select Dial, then press it. The pointer stops blinking, indicating that the function has been selected.

5 SET FUNCTION PARAMETERS
Rotate the Select Dial to cycle through the available settings for the selected function, and stop when the desired setting appears. Then press it, and the pointer and highlight bar automatically move to "RETURN".

- To set the parameters for a different function, repeat steps **4** and **5**.

6 CLOSE SYSTEM MENU
Press the Select Dial twice. Setting is complete and the System Menu disappears.

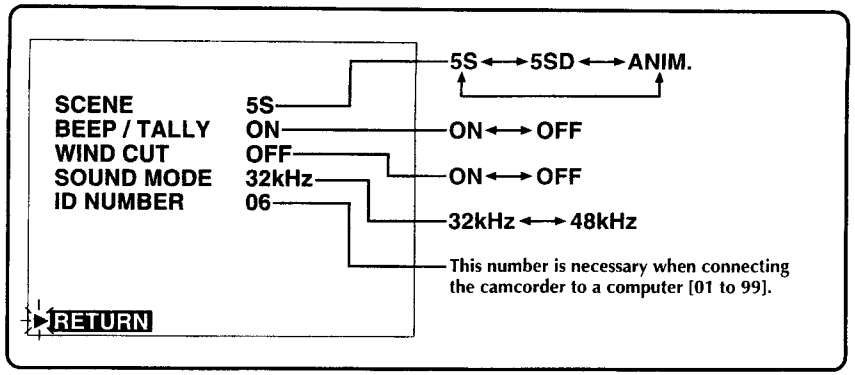

SCENE (5-Second Mode) (☞ pg. 26)

5S–Pressing **START/STOP** allows you to take a 5-second "clip". Press repeatedly for a succession of short recordings.
5SD–If you record a 5-second clip within 5 minutes after the previous one, the end of the old scene dissolves and is replaced by the new scene over a 2-second period.
ANIM. (Animation)–Each time you press **START/STOP**, a 1/8-second recording is taken. By using an inanimate object and changing its position between shots, you can record the subject as though it's moving.

- *Animation is not available in the LP mode. If you tried to record in the LP mode after setting ANIM., the recording mode indicator "LP" begins to blink, and recording goes on in the SP mode.*

NOTE:
During use of SCENE effect, focus (☞ pg. 45) and exposure control (☞ pg. 46) enter Full Auto operation.

BEEP/TALLY

The beep sounds when the power is turned on or off, and at the beginning and end of recording. Tally lamp lights up during recording.
The following three Pro Snapshot modes (☞ pg. 28) have a shutter sound effect: Pro Snapshot mode with no frame, Pro Snapshot mode with frame and Nega/Posi mode.
ON–To activate the beep/shutter sounds and tally lamp.
OFF–To turn off the beep/shutter sounds and tally lamp. Even though not heard while shooting, shutter sound is recorded on the tape.

NOTE:
Beep/Tally is automatically turned on during Full Auto operation.

WIND CUT

When activated, this mode helps cut down on noise created by wind.
ON–When shooting in high winds, noise is automatically reduced.

- "" appears.
- The quality of the sound will change. This is normal.

OFF–This function is disabled.

NOTE:
The Wind Cut mode is disabled during Full Auto operation.

SOUND MODE

Sound signals can be sampled at 32 kHz or 48 kHz.
32 kHz–The camcorder is factory-preset for 32 kHz. This setting enables recording of stereo sound on four separate channels, and is recommended for use when performing Audio Dubbing.
48 kHz–This setting enables recording of stereo sound on two separate channels.

NOTE:
A tape recorded at 48 kHz cannot be used for Audio Dubbing.

FADE/WIPE Effects

Use these to spice up the transition from one scene to the next. You can also vary transitions from scene to scene. Refer to pages 36 – 41 for Fade/Wipe effects and techniques.

Select any one effect from the Fader/Wipe Menu.

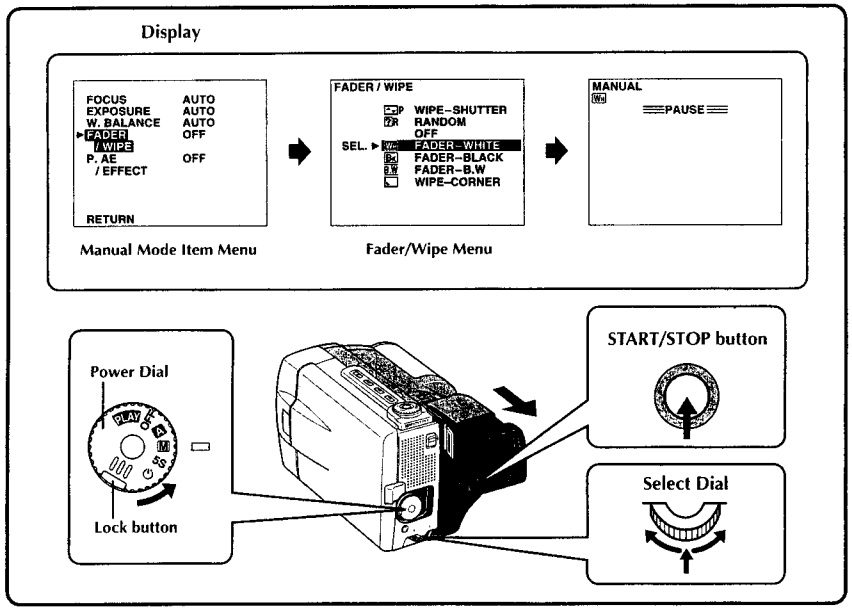

1 SELECT OPERATION MODE
First turn the Power Dial to "M" while pressing down the lock button located on the dial, make sure the LCD monitor is open fully or the viewfinder is pulled out.

2 ACCESS MANUAL MODE ITEM MENU
Press the Select Dial.

3 ACCESS FADER/WIPE MENU
Move the pointer and highlight bar to "FADER/WIPE" by rotating the Select Dial and then press it. The Fader/Wipe Menu appears.

4 SELECT EFFECT
Move the pointer and highlight bar to the desired effect by rotating the Select Dial, then press it.

- The Fader/Wipe Menu disappears and the effect is reserved. The indicator representing the selected effect appears.

5 START RECORDING
Press **START/STOP** to start recording and activate fade- or wipe- in

OR . . .

END RECORDING
Press **START/STOP** to end recording and activate fade- or wipe- out.

6 TO CANCEL FADE/WIPE EFFECTS
In step **4**, move the pointer and highlight bar to "OFF". Press the Select Dial.

IMPORTANT:
- *If certain P.AE/Effects (☞ pg. 42) are activated or if the Progressive Dial is set to "VIDEO", some Fade/Wipe Effects cannot be used. If you select a Fade/Wipe Effect that is unusable in the current situation, the indication blinks.*
- *When the Digital Image Stabilizer is activated, the Fade/Wipe Effects are not available.*

Fades and Wipes

A scene gradually appears on a black or white screen (Fade In/Wipe In), or disappears, leaving a black or white screen (Fade Out/Wipe Out). Select Fade or Wipe at the Fader/Wipe Menu (☞ pg. 36).

Select any one effect from WH, BK, B.W, ◺, ◻, ◧, ◨, ▲, and ▲▼ of the Fader/Wipe Menu.

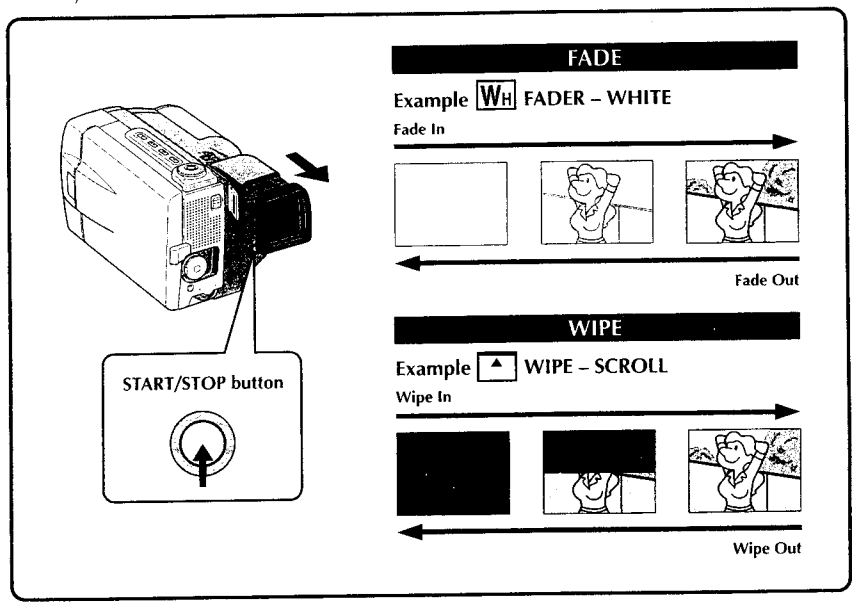

1 ACTIVATE FADE IN OR WIPE IN
Press **START/STOP** to start recording, and the Fade In or Wipe In occurs automatically.

2 ACTIVATE FADE OUT OR WIPE OUT
When you want to stop recording the scene, press **START/STOP**. Before the camcorder enters the Record-Standby mode, the Fade Out or Wipe Out occurs automatically.

NOTE:
*You can extend the length of a fade or wipe by pressing and holding the **START/STOP** button.*

Picture Wipe/Dissolve

Combine the Picture Wipe and Dissolve functions for a professional transition effect. There are 6 Picture Wipe effects and 1 Dissolve effect. Select the Picture Wipe effect at the Fader/Wipe Menu (☞ pg. 36).

Select any one effect from P, P, P, P, P, P and P of the Fader/Wipe Menu.

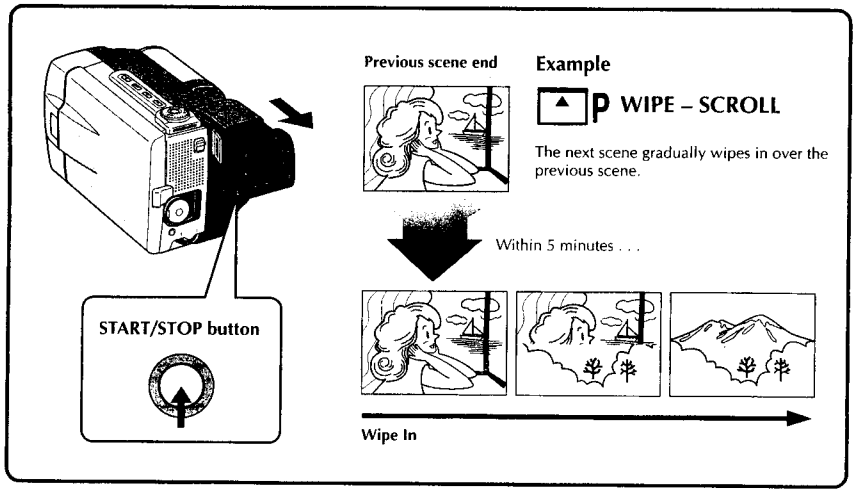

1 START RECORDING
Press **START/STOP**.

2 ENGAGE RECORD-STANDBY MODE
Press **START/STOP** when one scene is finished. The point at which the scene ended is stored in memory.

3 RESUME RECORDING
If you start recording a new scene within 5 minutes of the end of the previous recording (without having turned the camcorder's power off), the previous scene wipes out, revealing the new scene.

NOTES:

- *If you turn off the power after having finished recording a scene, the stored point is erased. This disables the Picture Wipe/Dissolve combination. When this happens, the Picture Wipe/Dissolve indicator blinks. Try recording again, but don't turn the power off when you're finished. Please be advised that power also shuts off automatically if 5 minutes elapse in the Record-Standby mode. The camcorder stores the end point of the last recorded scene, and you can use Picture Wipe/Dissolve between the last scene and the next one.*
- *The sound at the end of the last recorded scene is not stored.*

Random Variations

When R is selected, the camcorder chooses one of the fades/wipes at random.

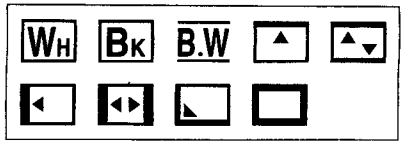

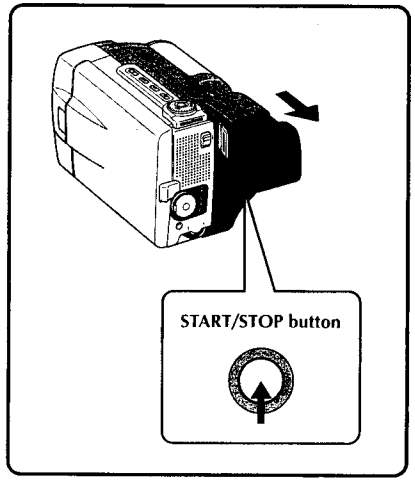

1 START RECORDING
Press **START/STOP**. The camcorder does the rest, selecting an effect at random.

- The recording starts with a Fade In or Wipe In. If you press **START/STOP** during recording, Record-Standby mode is preceded by a Fade Out or Wipe Out; when you resume recording, it begins with a Fade In or Wipe In.

NOTE:

The Picture Wipe/Dissolve feature is not available when Random Fader is activated.

FADER AND WIPE MENU

MENU	EFFECT
WH FADER — WHITE	Fade in or out with a white screen.
BK FADER — BLACK	Fade in or out with a black screen.
B.W FADER — B.W	Fade in to a colour screen from a black and white screen, or fade out from colour to black and white.
WIPE — CORNER	Wipe in on a black screen from the upper right to the lower left corner, or wipe out from lower left to upper right, leaving a black screen.
WIPE — WINDOW	The scene starts in the centre of a black screen and wipes in toward the corners, or comes in from the corners, gradually wiping out to the centre.
WIPE — SLIDE	Wipe in from right to left, or wipe out from left to right.
WIPE — DOOR	Wipe in as the two halves of a black screen open to the left and right, revealing the scene, or wipe out and the black screen reappears from left and right to cover the scene.
WIPE — SCROLL	The scene wipes in from the bottom to the top of a black screen, or wipes out from top to bottom, leaving a black screen.
WIPE — SHUTTER	Wipe in toward the centre of a black screen from the top and bottom, or wipe out from the centre toward the top and bottom, leaving a black screen.

MENU	EFFECT
P DISSOLVE	The new scene gradually appears as the old one gradually disappears.
P WIPE — CORNER	The new scene wipes in over the previous one from the upper right corner to the lower left corner.
P WIPE — WINDOW	The next scene gradually wipes in from the centre of the screen toward the corners, covering the previous scene.
P WIPE — SLIDE	The next scene gradually wipes in over the previous one from right to left.
P WIPE — DOOR	The previous scene wipes out from the centre to the right and left, like a door being pushed open to reveal the next scene.
P WIPE — SCROLL	The new scene wipes in over the last one from the bottom of the screen to the top.
P WIPE — SHUTTER	The new scene wipes in over the previous one from the center toward the top and bottom of the screen.
?R RANDOM	When this function is activated, the camcorder randomly selects the effect used in scene transition (from the Fade and Wipe effects).

P.AE/Effects

You can choose any one of the effects from the P.AE/Effect Menu.

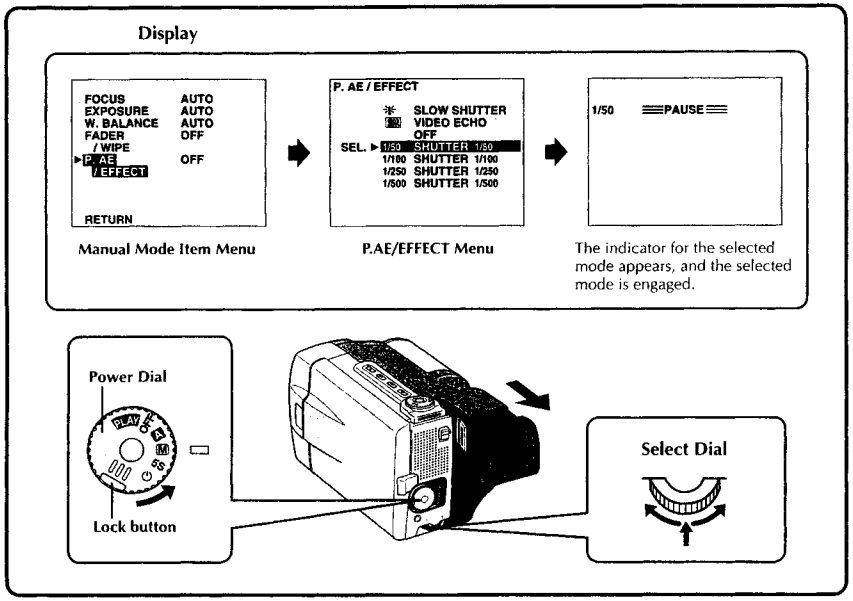

1 SELECT OPERATION MODE
First turn the Power Dial to "M" while pressing down the lock button located on the dial, make sure the LCD monitor is open fully or the viewfinder is pulled out.

2 ACCESS MANUAL MODE ITEM MENU
Press the Select Dial and move the pointer and highlight bar to "P.AE/EFFECT" by rotating the Select Dial.

3 ACCESS P.AE/EFFECT SELECT MENU
Press the Select Dial. The P.AE/Effect Menu appears.

4 SELECT EFFECT
Move the pointer and highlight bar to the desired effect by rotating the Select Dial, then press it.

- The P.AE/Effect Menu disappears and the selected mode is activated. The symbol of the selected mode appears.

5 START RECORDING
Press **START/STOP**. The image begins with the selected effect.

6 DISABLE P.AE/EFFECT
To turn off the selected effect, re-access the P.AE/Effect Menu and move the pointer and highlighlt bar to "OFF" by rotating the Select Dial. Then press it.

NOTES:

- *P.AE/Effects can be changed during recording or during Record-Standby.*

IMPORTANT:

- *If certain Fades or Wipes (☞ pg. 36 – 41) are activated or if the Progressive Dial is set to "VIDEO", some P.AE/Effects cannot be used. If you select a P.AE/Effect that is unusable in the current situation, the effect's symbol begins flashing.*
- *When the Digital Image Stabilizer is activated, the P. AE/Effects other than "SHUTTER" are not available.*

SHUTTER (Variable Shutter Speed)

1/50–The shutter speed is fixed at 1/50th of a second. Black bands that usually appear when shooting a TV screen become narrower.
1/100–The shutter speed is fixed at 1/100th of a second. The flickering that occurs when shooting under a fluorescent light or mercury-vapour lamp is reduced.
1/250, 1/500–These settings allow fast-moving images to be captured one frame at a time, for vivid, stable slow-motion playback. The faster the shutter speed, the darker the picture becomes. Use the shutter function under good lighting conditions.

TWILIGHT

Makes evening scenes look more natural. White Balance (☞ pg. 48) is initially set to ☀, but can be changed to your desired setting. Also when Twilight is chosen, the manual focus indication appears.

SEPIA

Recorded scenes have a brownish tint like old photos. Combine this with the Cinema mode for a classic look.

B/W MONOTONE

Like classic black and white films, your footage is shot in B/W. Used together with the Cinema mode, it enhances the "classic film" effect.

CLASSIC FILM

Gives recorded scenes a strobe effect.

STROBE

Your recording looks like a series of consecutive snapshots.

SLOW SHUTTER

You can light dark subjects or areas even brighter than they would be under good natural lighting.

x 2 = twice sensitivity
(shutter speed 1/25 sec.)

NOTES:

- *When using Slow Shutter, the image takes on a strobe-like effect.*
- *Use Slow Shutter only in dark areas.*
- *The Manual Focus indication may appear and flash when Slow Shutter is in use.*
- *If the image is out of focus, adjust manually. It is also recommended that you use a tripod, if possible.*

VIDEO ECHO

Adds a "ghost" to the subject, giving your recording a "fantasy" feeling.

Progressive Video Recording

If an image is recorded using the Progressive Mode, it is possible to play back a jitter-free still image with superior quality. A high-resolution still image can also be processed on a personal computer or can be printed out (☞ pg. 58, 59).

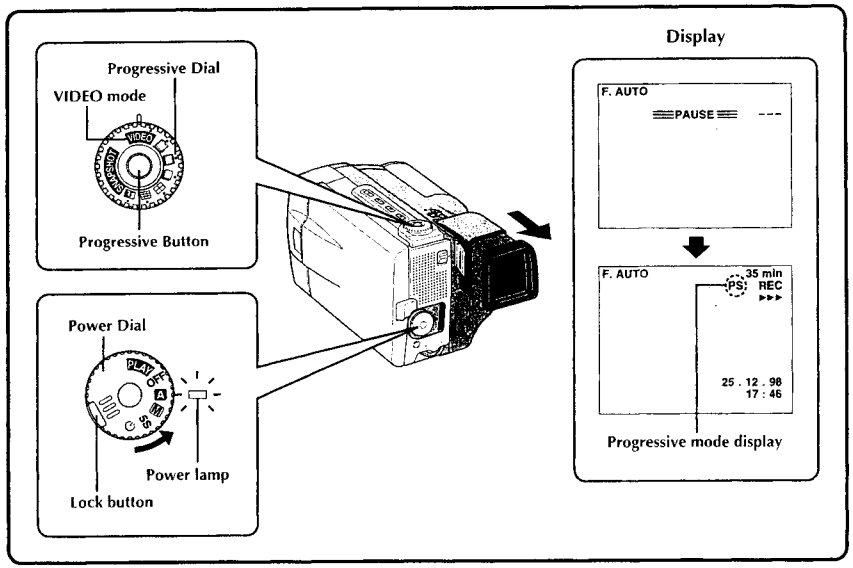

1 SELECT OPERATION MODE
Turn the Power Dial to "A" or "M" while pressing down the lock button located on the dial. Make sure the LCD monitor is open fully or the viewfinder is pulled out.

- The power lamp comes on.

2 SELECT PROGRESSIVE MODE
Turn the Progressive Dial to "VIDEO". "PS" (Progressive Mode Display) comes on.

3 START RECORDING
Press the Progressive Button located on the Progressive Dial. The tally lamp comes on.

4 END RECORDING
Press the Progressive Button. The camcorder enters Record-Standby mode.

To Perform Pro Snapshot Recording during Progressive Video Recording . . .

.... First turn the Progressive Dial to the Pro Snapshot Mode you want, then press the Progressive Button. To end recording, turn the Progressive Dial to "VIDEO", then press the Progressive Button again.

NOTES:

- *To perform Progressive Video Recording, the Progressive Button should be pressed during Record-Standby; it cannot be activated during recording.*
- *If **START/STOP** is pressed instead of the Progressive Button, the camcorder starts recording using the operation mode to which the Power Dial is set at that moment (☞ pg. 17). "PS" disappears.*

IMPORTANT:

- *When an image recorded using the Progressive Mode is played back, the image may not look natural.*
- *When the Progressive Dial is set to "VIDEO", Wipe/Dissolve (☞ pg. 41) Effects and some P.AE/Effects (☞ pg. 43) cannot be used.*

Manual Focus Adjustment

The camcorder, in most cases, adjusts the focus from approx. 1.5 cm to infinity automatically. However, when focusing is difficult or when the subject is not in the middle of the LCD monitor or the viewfinder, adjust the focus manually. Factory preset is "AUTO".

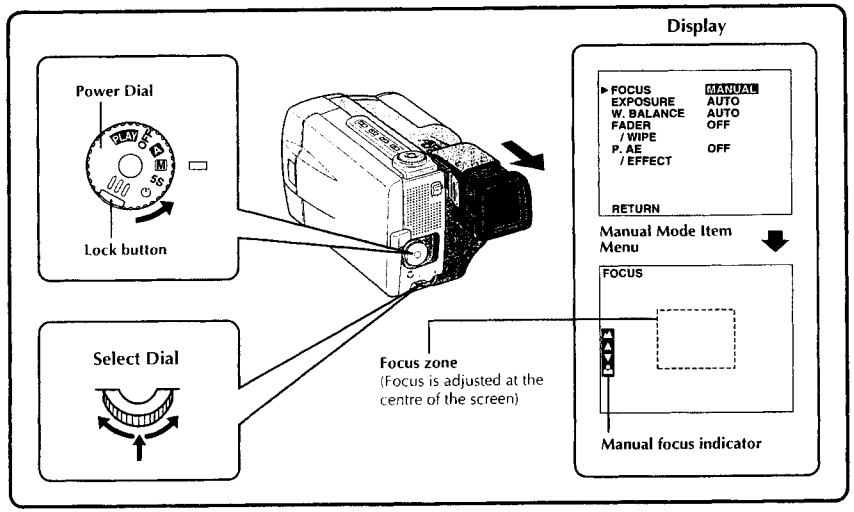

1 SELECT OPERATION MODE
First turn the Power Dial to "M" while pressing down the lock button located on the dial, make sure the LCD monitor is open fully or the viewfinder is pulled out.

2 ACCESS MANUAL MODE ITEM MENU
Press the Select Dial. The Manual Mode Item Menu appears.

3 ACCESS MANUAL FOCUS
Move the pointer and highlight bar to "FOCUS" by rotating the Select Dial, then press it. Rotate the Select Dial to display "MANUAL", then press it. The Manual Mode Item Menu disappears and "FOCUS" is displayed in the upper left corner. The focus is locked at this point.

4 ADJUST FOCUS
Rotate the Select Dial.

- "▲" blinks while rotating the Select Dial to the right to focus on faraway targets, and "▼" blinks while rotating the Select Dial to the left to focus on closer targets. Press the Select Dial at your desired focus.
- When the focus reaches its near or far limit, the "▲" or "▼" will begin blinking.
- When focus cannot be adjusted manually, try zooming in or out, then try the manual focus adjustment again.

5 END ADJUSTMENT OF FOCUS
Press the Select Dial. Focus adjustment is complete. The indication changes from "FOCUS" to "MANUAL".

- If you want to reset the focus, repeat from step **1**.

To Change To Auto Focus . . .

.... Rotate the Select Dial to display "AUTO" then press it in step **3**. The manual focus indicators disappear. Or set the Power Dial to "A".

NOTES:

- *When "FOCUS" is not displayed, Manual Focus Adjustment is not available. To make it appear, press **ON/OFF** for longer than 1 second or repeat from step **2**.*
- *Manual focus is recommended in the following situations:*
  - *When shooting a flat wall, a blue sky or an object with little or no contrast.*
  - *When wire or other obstacles come between the camcorder and the subject.*
  - *When shooting objects with a detailed design or pattern.*
  - *When shooting under flourescent or flickering lighting.*

Exposure Control

Usually this is adjusted automatically. However, when the background is too bright or too dark in comparison with the subject, the exposure could be corrected manually. Factory preset is "AUTO".

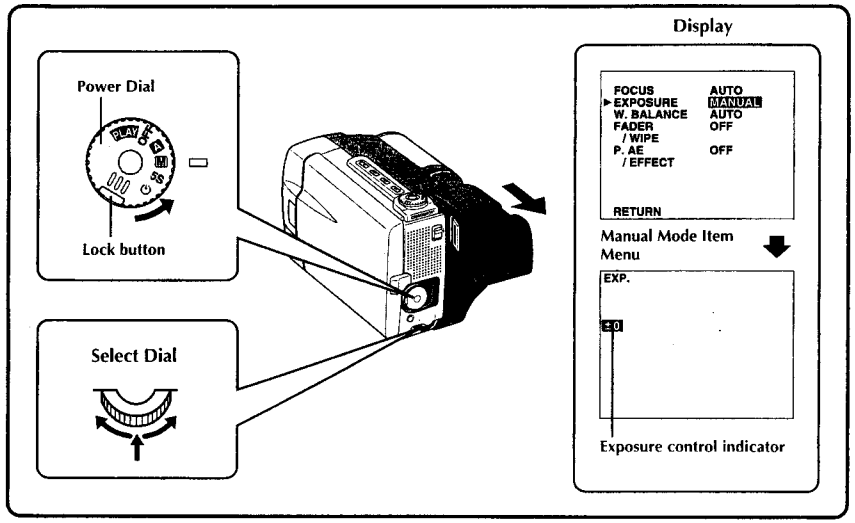

1 SELECT OPERATION MODE
First turn the Power Dial to "M" while pressing down the lock button located on the dial, make sure the LCD monitor is open fully or the viewfinder is pulled out.

2 ACCESS MANUAL MODE ITEM MENU
Press the Select Dial. The Manual Mode Item Menu appears.

3 ACCESS EXPOSURE CONTROL
Move the pointer and highlight bar to "EXPOSURE" by rotating the Select Dial, then press it. Rotate the Select Dial to display "MANUAL", then press it. The Manual Mode Item Menu disappears and "EXP." and the Exposure Control indicator are displayed.

4 ADJUST EXPOSURE
Rotate the Select Dial to the right/left to brighten or darken the image. Press the Select Dial at your desired exposure.

- The adjustment range is from -6 to +6.

5 END ADJUSTRMENT OF EXPOSURE
Press the Select Dial. Exposure adjustment is complete. The indication "EXP." changes to "MANUAL".

- If you want to reset the exposure, repeat step **1**.

To Return To Automatic Exposure Control . . .

.... Rotate the Select Dial to display "AUTO" then press it in step **3**. The Exposure Control indicator disappears. Or set the Power Dial to "A".

NOTES:

- *When "EXP." is not displayed, Manual Exposure Control is not available. To make it appear, press **ON/OFF** for longer than 1 second or repeat from step **2**.*
- *Manual exposure adjustment is recommended in the following situations:*
  - *When shooting using reverse lighting or when the background is too bright.*
  - *When shooting on a reflective natural background such as at the beach or when skiing.*
  - *When the background is overly dark or the subject light.*

Brightness control of the LCD monitor

To adjust the brightness of the LCD monitor, rotate the Select Dial (☞ pg. 22). Note that the actual recorded image's brightness can not be changed by rotating this dial.

Iris Lock

Use this function when shooting a moving subject, when zooming, when the subject changes its distance (thus its size in the LCD monitor or the viewfinder), or when you want to lock the brightness level.

When the subject is close, keep the iris locked. Even when the subject moves away from you, the image will not darken.

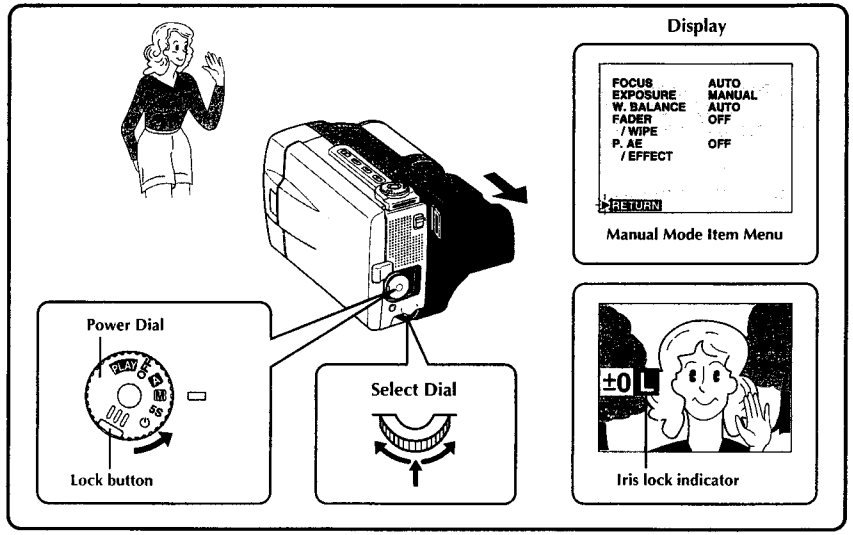

1 SELECT OPERATION MODE
First turn the Power Dial to "M" while pressing down the lock button located on the dial, make sure the LCD monitor is open fully or the viewfinder is pulled out.

2 ACCESS MANUAL MODE ITEM MENU
Press the Select Dial. The Manual Mode Item Menu appears.

3 ACCESS EXPOSURE CONTROL
Move the pointer and highlight bar to "EXPOSURE" by rotating the Select Dial and then press it. Rotate the Select Dial to display "MANUAL", then press it. "EXP." is displayed.

4 CENTER SUBJECT, LOCK IRIS
Adjust zoom so that the subject fills the LCD monitor or the viewfinder, then press and hold the Select Dial for over 2 seconds. The exposure setting display and "L" appear, indicating that the iris is locked.
Press the Select Dial. The indication displayed in the upper left corner changes from "EXP." to "MANUAL".

To Return To Automatic Iris Control . . .

.... Rotate the Select Dial to display "AUTO" then press it in step **3**. The Exposure Control indicator and "L" disappear. Or set the Power Dial to "A".

NOTES:

Iris lock is recommended in the following situations:

- *When shooting on a reflective natural background such as at the beach or when skiing.*
- *When shooting objects under a spotlight.*
- *When the subject is backing away.*
- *When zooming.*

To lock the exposure control and the iris . . .

.... After step **3**, adjust the exposure rotating the Select Dial. Then lock the iris in step **4**. For automatic locking, rotate the Select Dial to display "AUTO", then press it in step **3**. The iris becomes automatic after about 2 seconds.

Iris

Works like the pupil of the human eye. In a well-lit environment, the human pupil contracts to keep too much light from enterintg. In low lighting, the pupil dilates to allow more light in.

White Balance Adjustment

A term that refers to the correctness of colour reproduction under various lighting. If the white balance is correct, all other colours will be accurately reproduced.
The white balance is usually adjusted automatically. However, the more advanced camcorder operator would prefer to control this function manually and achieve a more professional colour/tint reproduction.

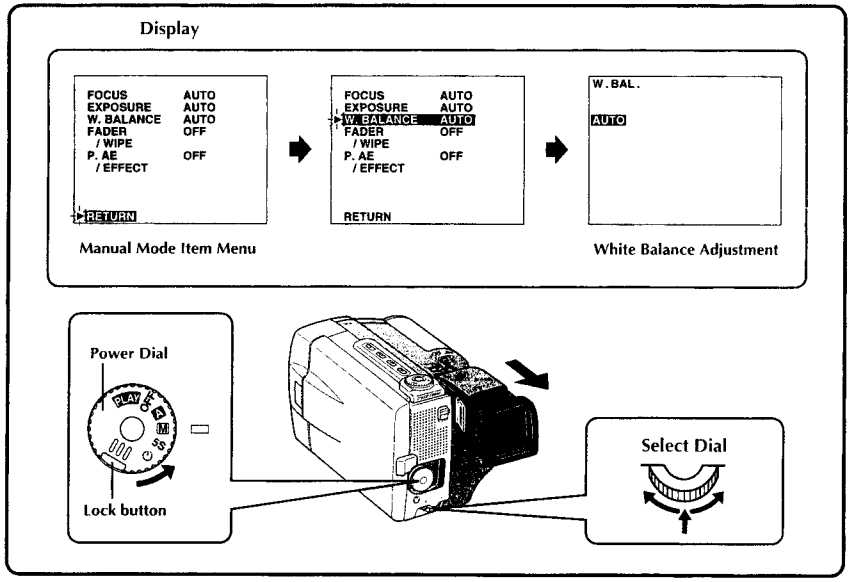

1 SELECT OPERATION MODE
First turn the Power Dial to "M" while pressing down the lock button located on the dial, make sure the LCD monitor is open fully or the viewfinder is pulled out.

2 ACCESS MANUAL MODE ITEM MENU
Press the Select Dial. The Manual Mode Item Menu appears.

3 ACCESS WHITE BALANCE ADJUSTMENT
Move the pointer and highlight bar to "W.BALANCE" by rotating the Select Dial. Then press it. The Manual Mode Item menu disappears and "W.BAL." appears in the upper left corner and "AUTO" appears on the screen.

4 SET FUNCTION PARAMETERS
Cycle through the available settings of the selected functions by rotating the Select Dial, and stop when the one you want is displayed.

5 CLOSE WHITE BALANCE ADJUSTMENT
Press the Select Dial again. Selection is complete. The indication "W. BAL." changes to "MANUAL".

To Return To Automatic White Balance . . .
.... select "AUTO" in step **3**. Or set the Power Dial to "A".

NOTE:
White balance cannot be used when P.AE/Effects Sepia or Monotone are activated.

AUTO–The white balance is adjusted automatically. This is the factory preset position.
"☀"– When using a video light or other similar type of lighting.
"☁"– When shooting outdoors on a cloudy day.
"☀"– When shooting outdoors on a sunny day.
"✎"– When shooting with the white balance already having been set on the subject (☞ pg. 49).

Manual White Balance Operation

If the camera is operating in manual mode, perform a Manual White Balance when shooting under various types of lighting

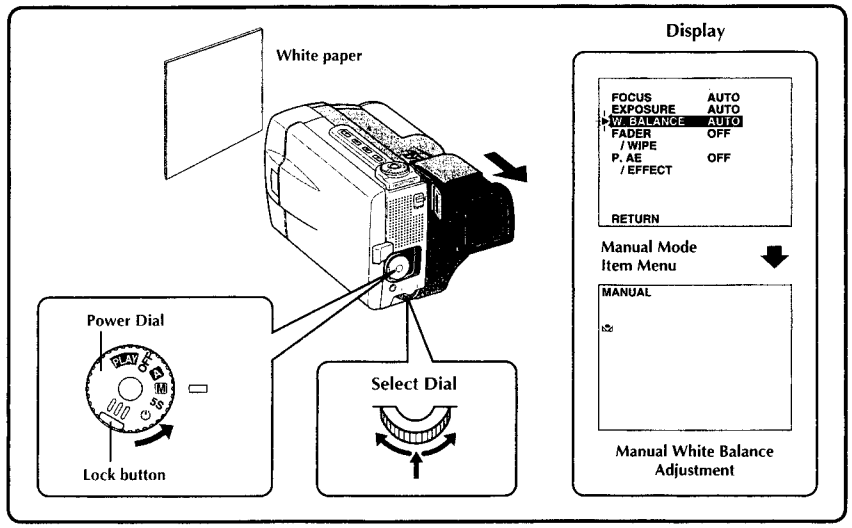

1 SELECT OPERATION MODE
Follow steps **1** through **4** of the white balance adjustment (☞ pg. 48), select "✎ MAN.".

2 SET MANUAL WHITE BALANCE
Hold a sheet of plain white paper in front of the subject. Adjust zoom or position yourself so that the white paper fills the screen.

3 ENTER SETTING
Press the Select Dial until the ✎ begins blinking.

- When the setting is completed, the ✎ stops blinking.

4 EXIT MANUAL WHITE BALANCE ADJUSTMENT
Press the Select Dial. The indication "W.BAL." changes to "MANUAL" and only the Manual White Balance indicator ✎ is displayed.

To Change The Tint For Recording . . .
.... In step **2**, substitute coloured paper for white. The white balance is adjusted based on the colour, changing the tint. Red paper — deeper green; blue paper — orange; yellow paper — deeper purple.

NOTES:
- *A subject can be shot under various types of lighting conditions indoors (natural, flourescent, candlelight, etc.). Because the colour temperature is different depending on the light source, the tint of the subject will differ depending on the white balance settings. Use this function for a more natural result.*
- *Once you adjust white balance during Manual White Balance operation, the setting is retained even if the power is turned off or the battery removed.*

You can watch what you've recorded in the LCD monitor.

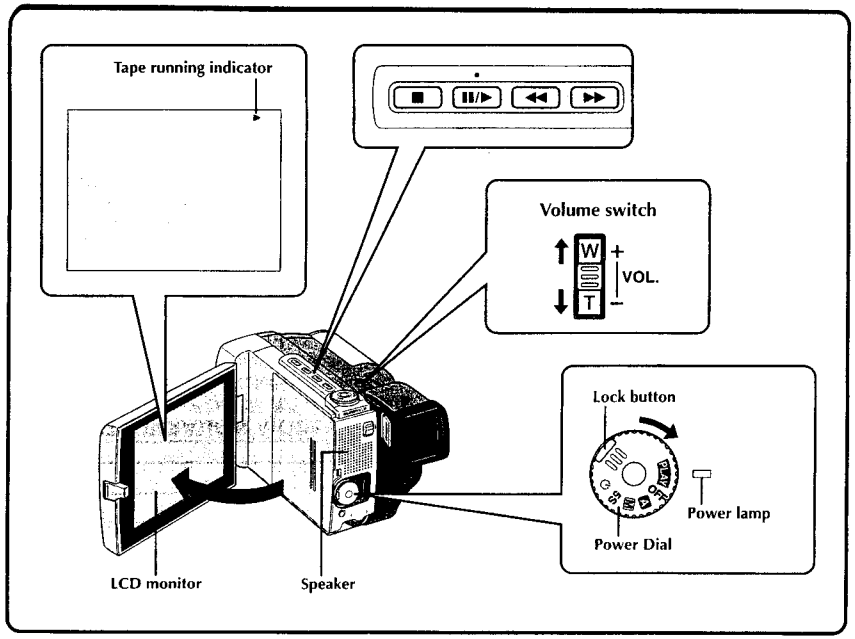

1 OPEN LCD MONITOR
Open the LCD monitor.

- When the viewfinder is pulled out, the LCD monitor cannot be used.

2 SELECT OPERATION MODE
Turn the Power Dial to "PLAY" while pressing down the lock button located on the dial. The Power lamp comes on.

3 REWIND TAPE
Press ◀◀. ◀◀ is displayed. If you rewind all the way to the end of the tape, it stops automatically.

4 VIEWING RECORDING
Press II/▶. ▶ appears and the recorded footage can be viewed. The sound is heard from the speaker.

5 END PLAYBACK
Press ■. Set the Power Dial to "OFF".

- When turning to "OFF", it is not necessary to press down the lock button.

To Perform High-Speed Search . . .

.... press ◀◀ or ▶▶ after pressing II/▶. The tape will move at approximately 9 times the normal playback speed. Watch in the LCD monitor and, when you reach the spot you want to see, press II/▶ and normal playback resumes.

.... during playback, press and hold ◀◀ or ▶▶. The search continues as long as you hold the button. Once you release it, normal playback resumes.

.... a slight mosaic effect appears on screen during High-Speed Search. This is not a malfunction.

Playback Sound

You can hear sound from the speaker or using headphones connected to the headphones connector during playback. To adjust the sound volume, slide the **VOL.** switch. The sound volume indication is displayed. Slide the **VOL.** switch towards "+" to turn up the volume, or towards "–" to turn it down.

Still Playback

To temporarily stop playback, press II/▶. Press again to resume playback. If still playback continues for more than about 3 minutes, the camcorder's Stop mode is automatically engaged. After 5 minutes in the stop mode, the camcorder's power is automatically turned off.

Slow-Motion Playback

- To perform Slow-motion playback, the remote control is necessary.
- To change from normal to slow-motion playback, press the Pause button at the point where you want to start playback in slow motion, and press the Slow Rewind or Slow Forward button on the remote control unit. After playing back in slow motion for about 10 to 20 seconds, normal playback resumes. Speed is 1/10 times normal. To stop slow-motion playback in progress, press the Play button.
- During slow-motion playback, due to digital image processing, the picture may take on a mosaic effect.
- After the Slow Rewind or Slow Forward button is pressed, the still image may be displayed for a few seconds, then the screen may become blue back for a few seconds. This is not a malfunction.
- There may be a small margin between the slow-motion playback start point you chose and the start point at which the camcorder actually begins playback in slow motion.

NOTES:

- *The sound is not available during High-Speed Search.*
- *Copy guarded tapes cannot be played back. The screen becomes blue back.*

Playback Zoom

The recorded pictures can be magnified up to 10X at any time during playback.

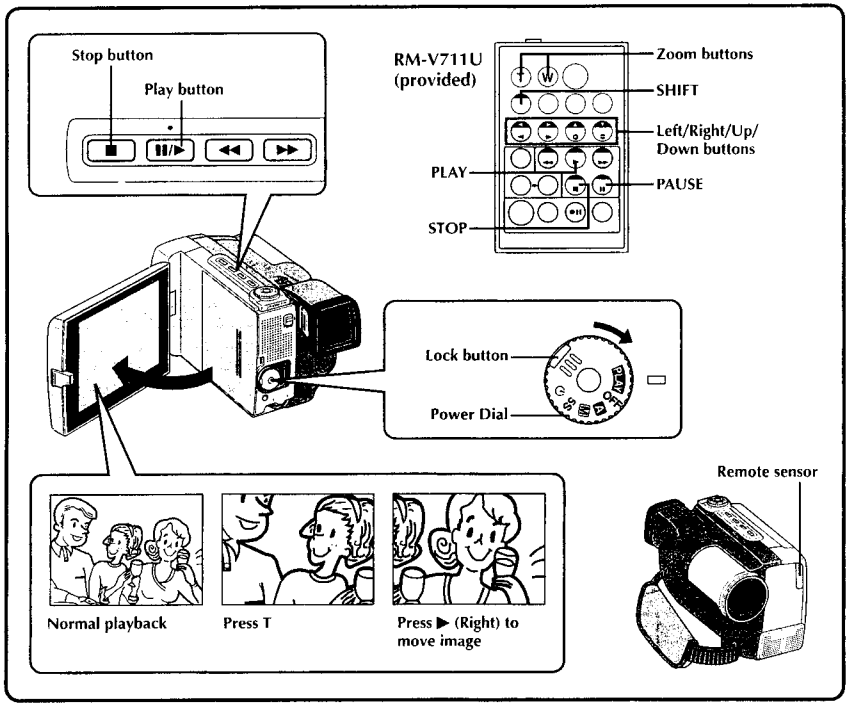

1 FIND THE SCENE OF INTEREST
Press the Play button to start playback.

2 ACTIVATE ZOOM
Press the zoom buttons (**T/W**) on the remote control. Make sure the remote control is pointed at the camcorder's remote sensor.

• Pressing **T** zooms in.

3 LOCATE PORTION OF MAGNIFIED SCENE
You can move the image on screen around to find a particular portion of the picture. While holding down **SHIFT**, press **◀ (Left)**, **▶ (Right)**, **▲ (Up)** and **▼ (Down)**.

4 END ZOOM
Press and hold **W** until magnification returns to normal. Or, press **STOP** and then press **PLAY**.

NOTES:

- *Zoom can also be used during slow-motion and still playback.*
- *If the Video Echo effect (☞ pg. 53) is selected during playback zoom, playback zoom is cancelled.*
- *During digital image processing, the quality of the image may suffer.*

Playback Effects

These effects allow you to be creative with the playback picture. You can use any one of the 5 effects.

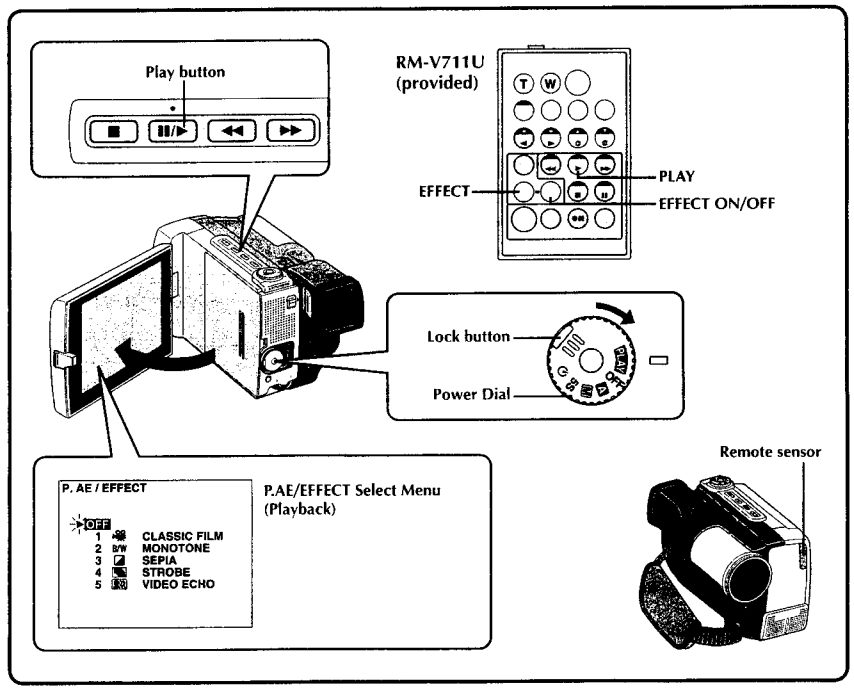

1 START PLAYBACK
Press the Play button (▶).

2 ACCESS P.AE/EFFECT SELECT MENU
Point the remote control at the camcorder's remote sensor and press **EFFECT**. The P.AE/ EFFECT Select Menu appears.

3 SELECT P.AE/EFFECT
Move the pointer and highlight bar to the desired effect by pressing **EFFECT**. The selected function is activated and after 2 seconds the menu disappears.

NOTES:

- *To deactivate the selected effect, press **EFFECT ON/OFF** on the remote control. Pressing it again re-activates the selected effect.*
- *Repeat from step **2** when you want to change the selected effect.*
- *When a Playback Effect is activated, Pro Snapshot modes (☞ pg. 29) are not possible.*

The effects that can be used during playback are *Classic Film, Monotone, Sepia, Strobe and Video Echo*. The effects work the same in playback as they did in recording. Refer to page 43 for more information.

Playback Menu

The Playback Menu allows you to set the following functions:

Playback Sound (32 kHz, 48 kHz), Synchro Comp, Display and *Time Code*. The following procedure applies to all except *Synchro Comp* (☞ pg. 66, 67).

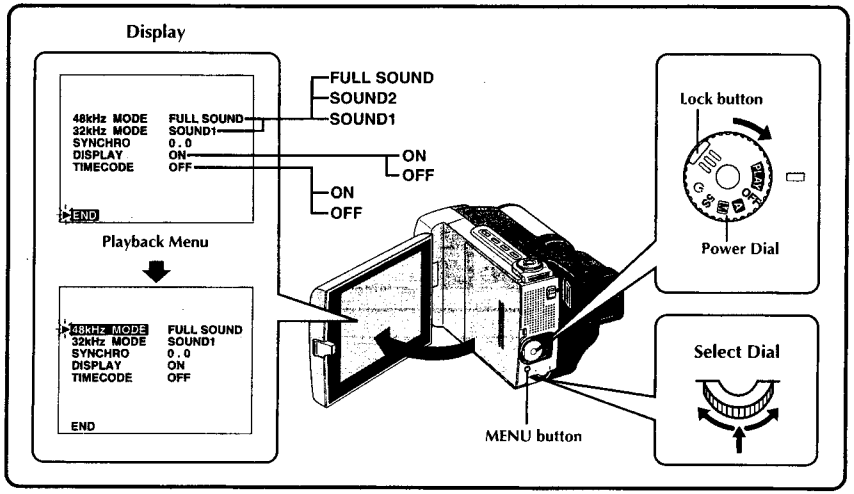

1 SELECT OPERATION MODE
First turn the Power Dial to "PLAY" while pressing down the lock button located on the dial. Open the LCD monitor fully.

2 ACCESS PLAYBACK MENU
Press **MENU**. The Playback Menu appears in the LCD monitor and on the connected TV.

3 SELECT FUNCTION
Move the pointer and highlight bar to the desired function by rotating the Select Dial. Press the Select Dial to activate.

4 SET FUNCTION PARAMETERS
Rotate the Select Dial to cycle through the available settings for the selected function, and stop when the desired setting appears. Then press the Select Dial, and the pointer and highlight bar automatically move to "END".

- To set parameters for other functions, repeat steps **3** and **4**.

5 CLOSE MENU
Press the Select Dial again, and the menu disappears.

Playback Sound

During playback, the camcorder detects the sound mode in which the recording was made, and plays the sound back. Select the type of sound to accompany your playback picture. (32 kHz is preset to "SOUND 1" and 48 kHz is preset to "FULL SOUND".)

RECORDING SOUND	DISPLAY	OUTPUT SOUND
32 kHz	FULL SOUND	Stereo sound
	SOUND 1	
	SOUND 2	
48 kHz	FULL SOUND	Stereo sound
	SOUND 1	"L" sound is output on both channels
	SOUND 2	"R" sound is output on both channels

When watching a tape recorded at 32 kHz, if you want to change the output sound, access the Playback Menu and, in step **3** on page 54, select "32kHz MODE" and set it for "FULL SOUND", "SOUND 1" or "SOUND 2". When playing back a tape recorded at 48kHz, set in the same manner. For information on output sound during Audio Dubbing, see page 68.

NOTES:

- *You can also use the RM-V711U remote control's* ***AUDIO MONITOR*** *Button to change the output sound (without having to access the Playback Menu). Make sure you point the remote control at the camcorder's remote sensor.*
- *During playback, the camcorder detects the sound mode in which the recording was made. This detection cannot be made during fast-forward or rewind. During playback the sound mode is displayed in the upper left corner.*

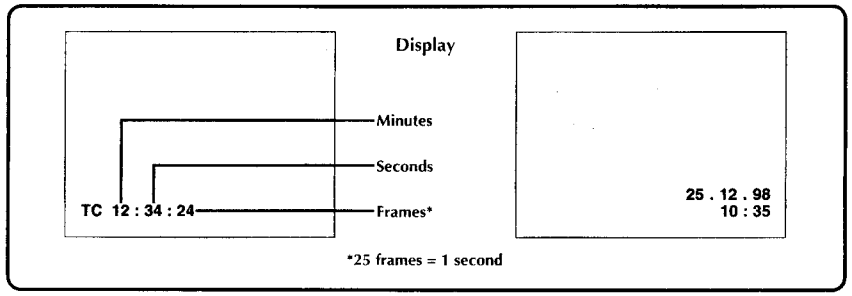

TIME CODE (Displaying The Time Code During Playback)

You can display the Time Code on screen during playback. This is especially useful for editing. This function is preset to "OFF". To turn it on, select "TIME CODE" at the Playback Menu and change the setting (☞ pg. 54).

ON– The Time Code is displayed on the playback screen.

OFF– The Time Code does not appear.

DISPLAY (Displaying the Date During Playback)

If the time has been set, the date is automatically recorded separately from the recorded video signal. You can display or remove the date anytime during playback. This function is preset to "ON". To turn it off, select "DISPLAY" at the Playback Menu and change the setting (☞ pg. 54).

ON– The date is displayed on the playback screen.

OFF– The date is not displayed.

VCR/TV Connection

Please refer to your VCR and/or TV instruction manual(s) when connecting.

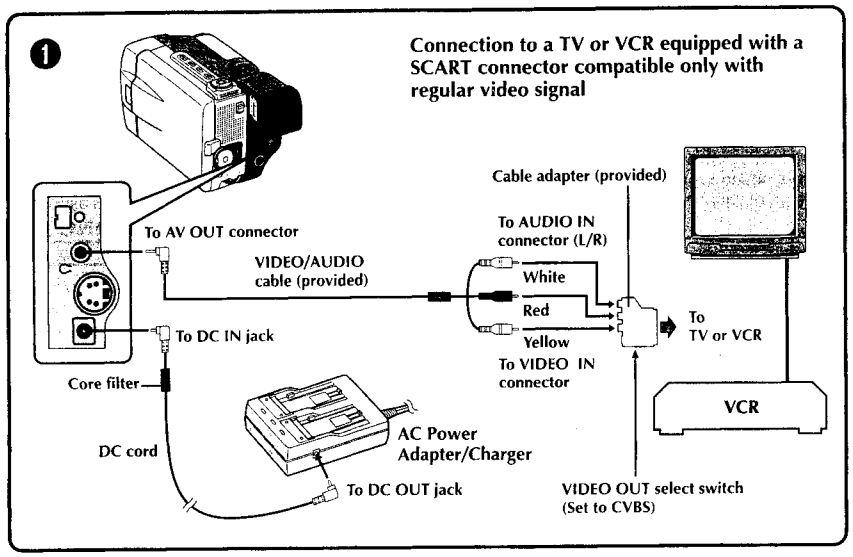

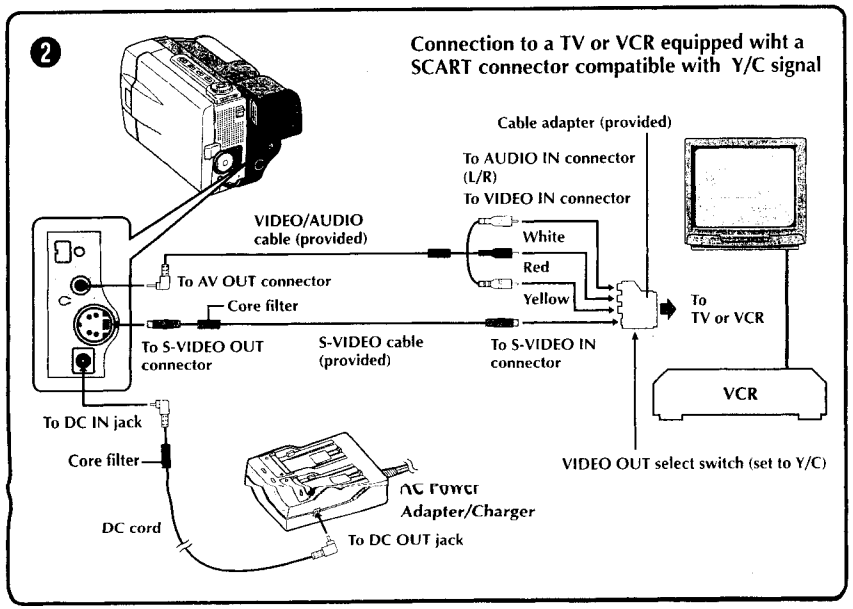

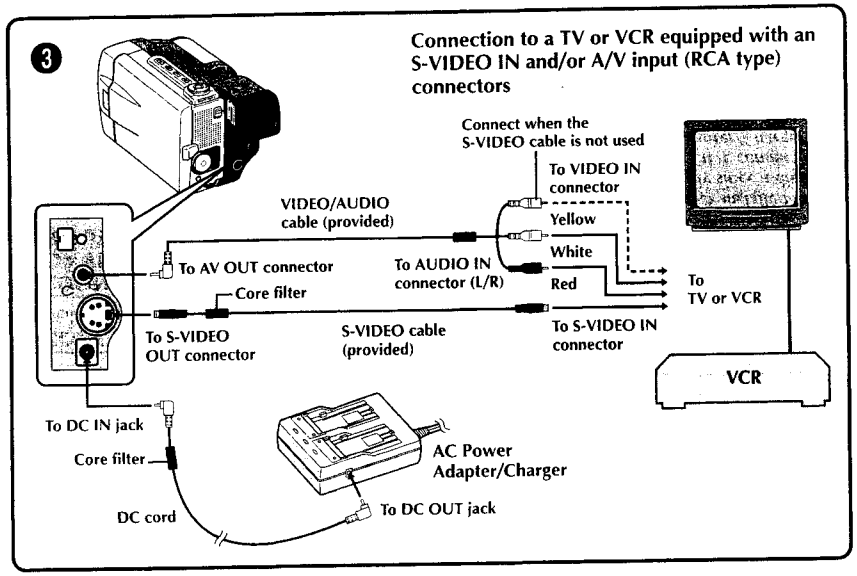

1 CONFIRM POWER-OFF STATUS
Make sure the camcorder's power is off.

2 CONNECT CAMCORDER TO TV OR VCR
Connect as shown in the illustration ❶, ❷ or ❸ (☞ pg. 56, 57).

*If Using A VCR . . . go to step **3**.*
*If not . . . go to step **4**.*

3 CONNECT VCR OUTPUT TO TV INPUT
Refer to your VCR's instruction manual.

4 TURN ON POWER
Turn the Power Dial to "PLAY" while pressing down the lock button located on the dial and turn on the TV/VCR.

5 SELECT TV'S VIDEO MODE
Set the TV to the channel or mode appropriate for video playback.

To choose whether or not the following displays appear on the connected TV . . .

- Date/Time, Time Code
  .... set to "ON" or "OFF" in the Playback Menu (☞ pg. 54).
- Playback Sound Mode Display
  .... press the **MENU** button, and set "ON SCREEN" in the Date/Time Menu (☞ pg. 11) to "ON" or "OFF". Then set the Power Dial back to "PLAY".

NOTES:

- ***Never connect any other VIDEO/AUDIO cable than the provided VIDEO/AUDIO cable to the camcorder's AV OUT connector.***
- *When using the provided DC cord, S-VIDEO cable or editing cable, make sure you connect the end of the cable with the core filter to the camcorder. The core filter improves performance of equipment.*
- *If TV/VCR is equipped with only one audio connector, use a conversion plug (commercially available).*
- *Make sure you adjust the TV sound volume to its minimum level to avoid a sudden burst of sound when the camcorder is turned on.*
- *To keep the camcorder's display from appearing on the TV screen during playback, press the **ON/OFF** button for longer than 1 second.*
- *Set the VIDEO OUT select switch of the cable adapter as required:*
  Y/C: When connecting to a TV or VCR which accepts Y/C signals and uses an S-VIDEO cable.
  CVBS: When connecting to a TV or VCR which does not accept Y/C signals and uses an audio/video cable.

Connection To A Personal Computer

This camcorder can transfer still images to a personal computer by using the provided software when connected as shown in the illustration below. It is also possible to transfer still images to a personal computer with a DV connector-equipped capture board installed.

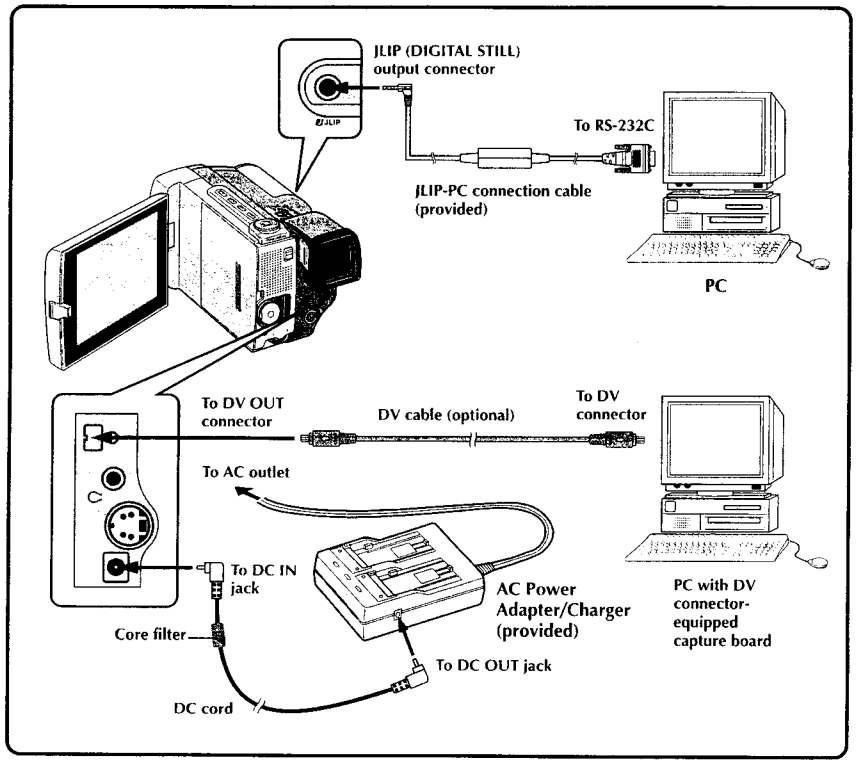

1 CONFIRM POWER-OFF STATUS
Make sure the camcorder and PC are turned off.

2 CONNECT CAMCORDER TO PC
Pull out the connector cover and open it. Connect the camcorder to a PC using the cable according to your PC type as shown in the illustration.

3 SUPPLY POWER
Connect the camcorder to the AC Power Adapter/Charger using the DC cord, then plug the AC Power Adapter/Charger's power cord into an AC outlet.

4 TURN ON POWER
Turn the camcorder's Power Dial to "PLAY" while pressing down the lock button located on the dial and turn on the PC.

NOTES:

- ***When transferring still images, never use the battery pack installed in the camcorder as the power supply. Use the provided AC Power Adapter/Charger.***
- *The date/time information cannot be captured into the personal computer.*
- *Also refer to the instruction manuals of the provided Software and the DV connector-equipped capture board.*

Connection To A Video Unit Equipped With A DV Connector

Connection to the Digital Printer GV-DT1 (optional) allows you to print out the images or to transfer the captured image from the Digital Printer to a personal computer. It is also possible to copy recorded scenes from the camcorder onto another video unit equipped with a DV connector. This function is called Digital Dubbing (☞ pg. 61), which offers virtually no image or sound deterioration.

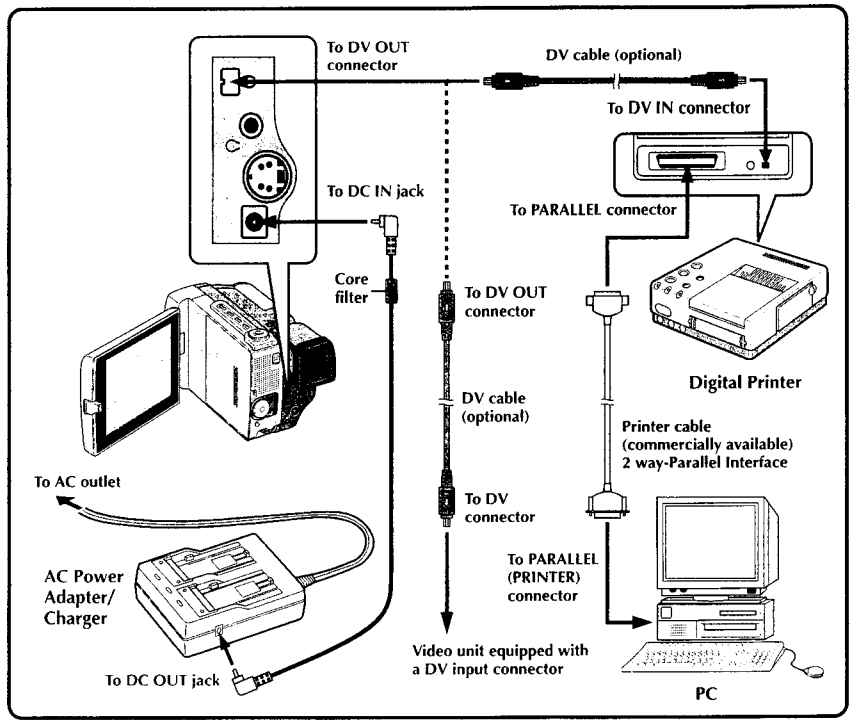

1 CONFIRM POWER-OFF STATUS
Make sure all the units are turned off.

2 CONNECT CAMCORDER TO PRINTER OR VIDEO UNIT EQUIPPED WITH DV INPUT CONNECTOR
Pull out the connector cover and open it. Make connections to the device you want to connect to using the DV cable, as shown in the illustration.

3 CONNECT PRINTER TO PC
Connect the printer cable to the printer's PARALLEL connector and the PC's PARALLEL (PRINTER) connector.

4 SUPPLY POWER
Connect the camcorder to the AC Power Adapter/Charger using the DC cord, then plug the AC Power Adapter/Charger's power cord into an AC outlet.

5 TURN ON POWER
Turn the camcorder's Power Dial to "PLAY", "A" or "M" while pressing down the lock button located on the dial and turn on the other units.

NOTES:

- ***You cannot use the battery pack installed in the camcorder as the power supply since a digital signal is output from the DV OUT connector only when using the AC Power Adapter/Charger.***
- *When using the camcorder for dubbing, be sure to use it as a player. The camcorder's DV connector is only for output.*
- *Also refer to the instruction manuals of the connected units.*

Dubbing

You can copy recorded scenes from the camcorder onto a videotape. Refer to your VCR's instruction manual for details.

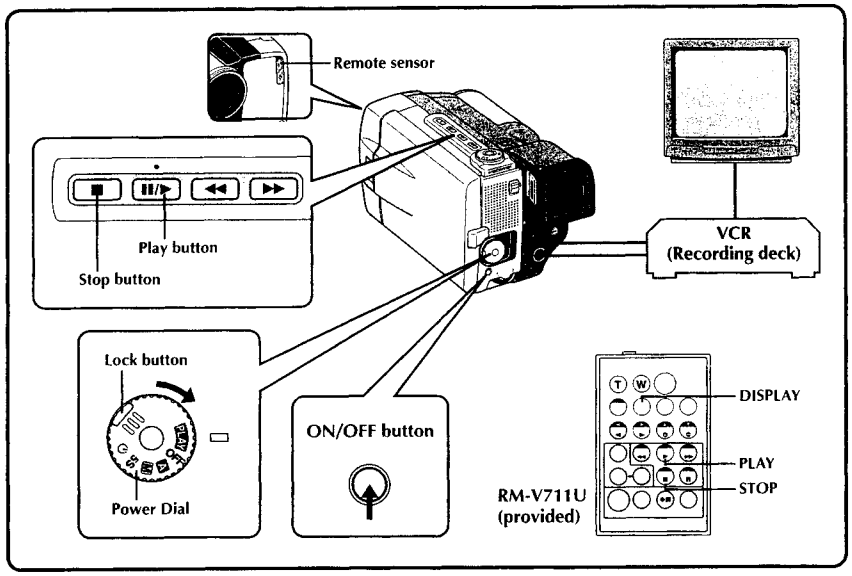

1 MAKE CONNECTIONS
Connect the camcorder to your VCR as shown in the illustration on pages 56, 57.
Please also refer to your VCR's instruction manual before dubbing.

2 START PLAYBACK
Press the Play button (▶) to play back the source tape.

3 START RECORDING
While watching on the connected TV, engage your VCR's record mode from the spot on the source tape you want to begin recording.

4 PAUSE RECORDING
Engage your VCR's pause mode to stop recording a segment.

5 END RECORDING
Press the Stop button (■) to stop the source tape, and engage the VCR's stop mode.

NOTES:

- *You can use Playback Zoom (☞ pg. 52) or Playback Effects (☞ pg. 53) in step **2**.*
- *Before you start dubbing, make sure that the indications do not appear on the connected TV. If they do appear during dubbing, they are being recorded onto the new tape.*
  *To clear the Playback Sound Mode Display, press **DISPLAY** on the RM-V711U Remote Control.*
- *Select "DISPLAY" and "TIME CODE" from the Playback Menu (☞ pg. 54) to show or hide the Date/Time and the Time Code on the recording.*
- *To show or hide all indications, press the **ON/OFF** button on the camcorder for longer than 1 second.*

Digital Dubbing

It is also possible to copy recorded scenes from the camcorder onto other video unit equipped with a DV connector. Since digital signal is sent, there is little if any image or sound deterioration.

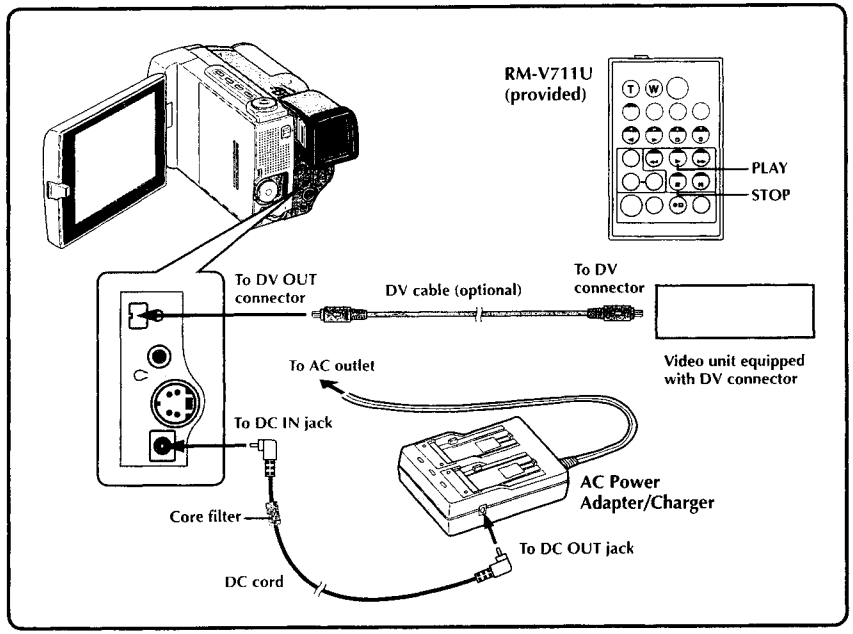

1 CONFIRM POWER-OFF STATUS
Make sure the camcorder's power is off.

2 MAKE CONNECTIONS
Connect the camcorder to your video unit equipped with a DV connector using the DV cable (optional) as shown in the illustration.

3 START PLAYBACK
Press the Play button (▶) to play back the source tape.

4 START RECORDING
While watching the playback on the LCD monitor, engage the DV connector-equipped video unit's record mode from the spot on the source tape you want to begin recording.

NOTES:

- ***You cannot use the battery pack installed in the camcorder as the power supply since a digital signal is output from the DV OUT connector only when using the AC Power Adapter/Charger.***
- *When using the camcorder for dubbing, be sure to use it as a player. The camcorder's DV connector is only for output.*
- *If a blank portion is played back during dubbing, an unusual image may be dubbed.*
- *Even though the DV cable is connected correctly, sometimes the image may not appear in step **3**. If the above occurs, turn off power and make connections again.*
- *The image with Fade/Wipe Effects and P.AE/Effects is not output from the DV OUT connector. Only the original playback image is output from it.*

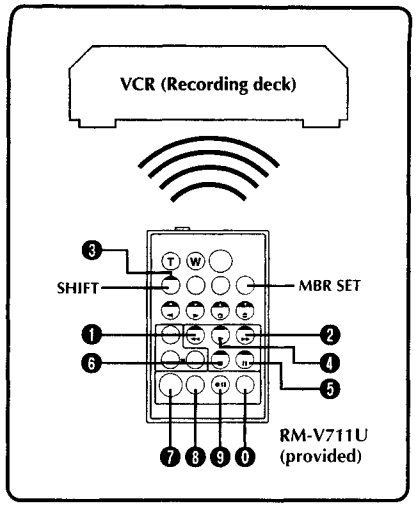

VCR CODE LIST

VCR BRAND NAME	BUTTONS (A)	(B)
AKAI	6	2
	6	4
	7	7
BLAUPUNKT	1	3
FERGUSON	9	7
	9	8
	3	2
GRUNDIG	1	4
	3	4
HITACHI	6	6
	6	3
JVC A	9	1
B	9	6
C	9	3
MITSUBISHI	6	7
	6	8
NEC	3	7
	3	8
PANASONIC	1	3
	1	7
	1	1
	9	4
	1	8

VCR BRAND NAME	BUTTONS (A)	(B)
PHILIPS	1	9
	9	5
	1	1
	9	4
	9	1
	9	6
	1	2
	3	3
SANYO	3	6
	3	5
SELECO, REX	9	1
	9	6
SHARP	1	5
	1	0
SONY	6	5
	6	0
	3	9
	3	1
THOMSON, TELEFUNKEN, SABA, NORDMENDE	9	1
	9	6
	9	7
	3	2
TOSHIBA	6	9
	6	1

Brand Setting

Before you can perform Random Assemble Editing (☞ pg. 63 – 65), or control the VCR using the RM-V711U remote control, you must set the VCR brand.

SET REMOTE/VCR CODE

Before operation, make sure the lithium battery is installed in the remote control RM-V711U (☞ pg. 16).

1 SET REMOTE TO OPERATE VCR

Turn off the power to the VCR and point the remote towards the VCR's infrared sensor. Then, referring to the VCR CODE LIST on the left, press and hold **MBR SET**, and press button (A) and then (B).

- The code is automatically set once you release the **MBR SET** button, and the VCR's power comes on.

2 OPERATE THE VCR

Make sure the VCR's power is on. Then, while holding **SHIFT**, press the button on the remote for the desired function. The functions the remote can control are PLAY, STOP, PAUSE, FF, REW and VCR REC STBY (you don't need to press **SHIFT** for this one).

You're now ready to try Random Assemble Editing.

IMPORTANT

Although the MBR is compatible with JVC VCRs and those of many other makers, it may not work with yours or may offer limited functions.

NOTES:

- *If the VCR's power doesn't come on in step **1**, try another code from the VCR CODE LIST.*
- *Some brands of VCR don't come on automatically. In this case, turn the power on manually and try step **2**.*
- *If the RM-V711U is not able to control the VCR, use the controls on the VCR.*
- *When the remote control's battery runs out, the VCR brand you have set will be erased. In that case, replace the old battery with a new one to reset the VCR brand.*

Random Assemble Editing

Using the RM-V711U remote control, you can use P.AE/Effects and make an original edited tape.

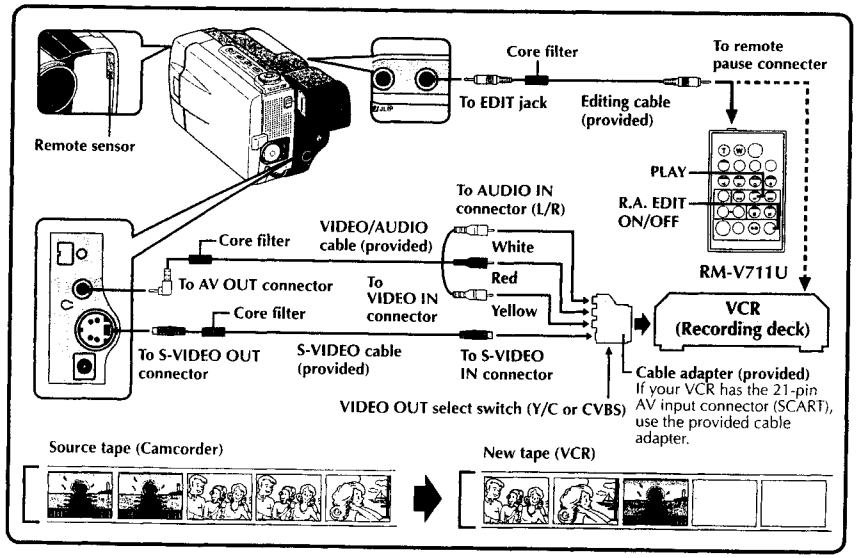

1 MAKE CONNECTIONS

Make sure that the playback picture and sound are available on the connected TV (☞ pg. 56, 57).

- Connections should be made while the power is off. Making connections with the power on can lead to electrical shock or malfunctions.

2 START SOURCE PLAYBACK

First turn the Power Dial to "PLAY" while pressing down the lock button located on the dial. Press **PLAY** and then press **R.A. EDIT ON/OFF** on the remote control. Make sure to point the remote control at the camcorder's remote sensor.

- The Random Assemble Editing Menu appears on the TV screen or the LCD monitor.

3 EXECUTE FADE/WIPE IN (IF NECESSARY)

Press **FADE/WIPE** on the remote control.

- Cycle through the effects by pressing repeatedly, and stop when the one you want is displayed.
- You can't use a Picture Wipe/Dissolve at the beginning of Program 1.

NOTES:

- *When using a JVC VCR with a remote pause terminal, connect the EDIT jack on the camcorder to the VCR's remote pause terminal using an editing cable.*
- *If you use a JVC VCR not equipped with a remote pause terminal or a non-JVC VCR, connect the camcorder's EDIT jack to the remote control's remote pause connector using an editing cable.*
- *Set the VIDEO OUT select switch of the cable adapter as required:*
  Y/C: When connecting to a TV or VCR which accepts Y/C signals and uses an S-VIDEO cable.
  CVBS: When connecting to a TV or VCR which does not accept Y/C signals and uses an audio/video cable.
- *Before Random Assemble Editing, make sure the indications don't appear on the TV monitor. If they appear during Random Assemble Editing, they will be recorded onto the new tape. To clear the Playback Sound Mode Display, press **DISPLAY** on the RM-V711U Remote Control. Select "DISPLAY" and "TIME CODE" from the Playback Menu (☞ pg. 54) to show or hide the Date/Time and the Time Code on the recording. To show or hide all indications except for the Random Assemble Editing Menu, press **ON/OFF** on the camcorder for longer than 1 second. When Random Assemble Editing starts, its indications disappear and are not recorded on the new tape.*

CONTINUED ON NEXT PAGE

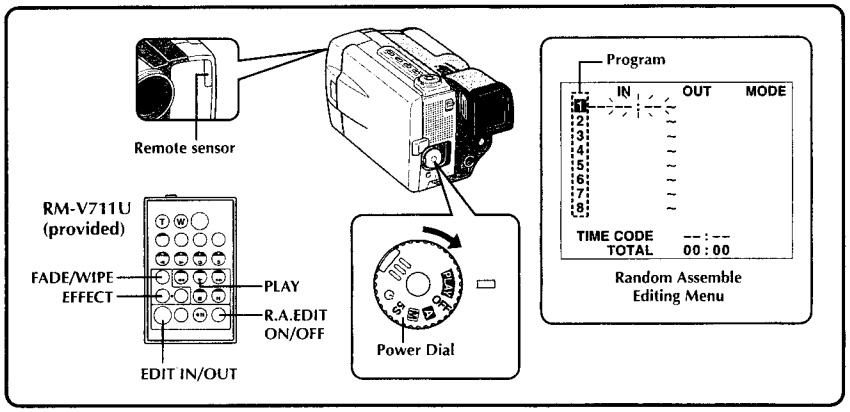

4 SET EDIT-IN POINT

At the beginning of the scene, press **EDIT IN/OUT** on the remote control. The Edit-In position appears on the Random Assemble Editing Menu.

5 SET EDIT-OUT POINT

At the end of the scene, press **EDIT IN/OUT**. The Edit-Out position appears on the Random Assemble Editing Menu.

6 USE FADE WIPE ON SCENE TRANSITION (IF NECESSARY)

Press **FADE/WIPE**.

- Cycle through the effects by pressing repeatedly, and stop when the one you want is displayed.
- If you select a Fade/Wipe effect for an Edit-Out point, the effect is automatically applied to the following Edit-In point.
- You can't use a Picture Wipe/Dissolve at the end of the last scene.
- When you use Fade/Wipe effects, that time is included in the total time (this does not apply to Picture Wipe/Dissolve).

7 USE P.AE/EFFECT (IF NECESSARY)

Press **EFFECT**.

- Cycle through the effects by pressing repeatedly, and stop when the one you want is displayed.
- You can use Classic Film, Monotone, Sepia, Strobe or Video Echo effects.

NOTES:

- *When the source tape has more than 2 identical time codes (☞pg. 21), the camcorder may not find the Edit-In point you chose and a malfunction may occur.*
- *When choosing a scene, set Edit-In and Edit-Out points so there's a relatively large difference between them.*
- *If the search time for an in-point exceeds 5 minutes, the recording deck's Record-Standby mode will be cancelled and editing will not take place.*
- *If there are blank portions before or after the Edit-In and Edit-Out points, a blue-backed screen may be included in the edited version.*
- *Since time codes register time only as accurately as seconds, the time code total time may not match the total program time exactly.*
- *Turning off the camcorder's power erases all registered Edit-In and Edit-Out points.*
- *If you use Sepia or Monotone P.AE/Effects, you can't use the Dissolve or Black & White Fader. In this case the Dissolve or Black & White indicator begins blinking. Once the next Edit-In point is registered, the effect is turned off. To combine these effects, use Sepia or Monotone during recording, then use Dissolve or Black & White Fader during Random Assemble Editing.*
- *During Digital Dubbing, Fade/Wipe Effects and P.AE/Effects are not available.*

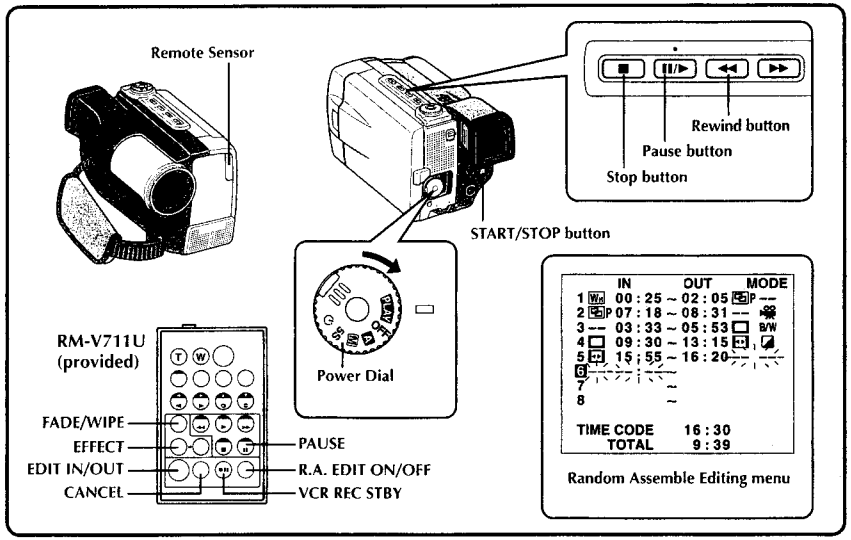

8 REGISTER ADDITIONAL SCENES

Repeat steps **4** – **7** (☞ pg. 64).

- To change previously registered points, press **CANCEL** on the remote control. The registered points disappear, one at a time, from the most recently registered point.
- If you're not using Fade/Wipe or P.AE/Effects, repeat steps **4** and **5** only.

9 PREPARE SOURCE TAPE

Rewind the tape in the camcorder to the beginning of the scene you want to edit and press the Pause button (❚❚).

10 ENGAGE VCR'S RECORD-PAUSE MODE

Point the remote control towards the VCR's remote sensor and press **VCR REC STBY**, or manually engage the VCR's Record-Pause mode.

11 START EDITING

Press the **START/STOP** button on the camcorder. Editing proceeds as programmed, right through to the end of the last registered scene.

- When dubbing is complete, the camcorder enters the Pause mode, and the recorder enters its Record-Standby mode.
- If you don't register an Edit-Out point, the tape will be dubbed all the way to the end automatically.

12 STOP EDITING

Engage the Stop modes for the camcorder and the VCR.
To make the R.A. Edit counter display disappear, press **R.A. EDIT ON/OFF** on the remote control.

NOTES:

- *Pressing **R.A. EDIT ON/OFF** on the remote control clears all settings registered during Random Assemble Editing.*
- *When the editing cable is connected to the Pause terminal during dubbing, make sure the remote control is pointed at the VCR's sensor, and that the path between the two is unobstructed.*
- *If, during Random Assemble Editing, you press any button on the camcorder, its Record-Standby mode is automatically engaged.*
- *Random Assemble Editing may not function properly when using a tape including several duplicated Time Codes. (☞ pg. 21).*

For More Accurate Editing

Some VCRs make the transition from Record-Standby to Record mode faster than others. Even if you begin editing for the camcorder and the VCR at exactly the same time, you may lose scenes you wanted, or find that you've recorded scenes you didn't want. For a cleanly edited tape, confirm and adjust the timing of the camcorder against your VCR.

Diagnosing VCR's against Camcorder Timing

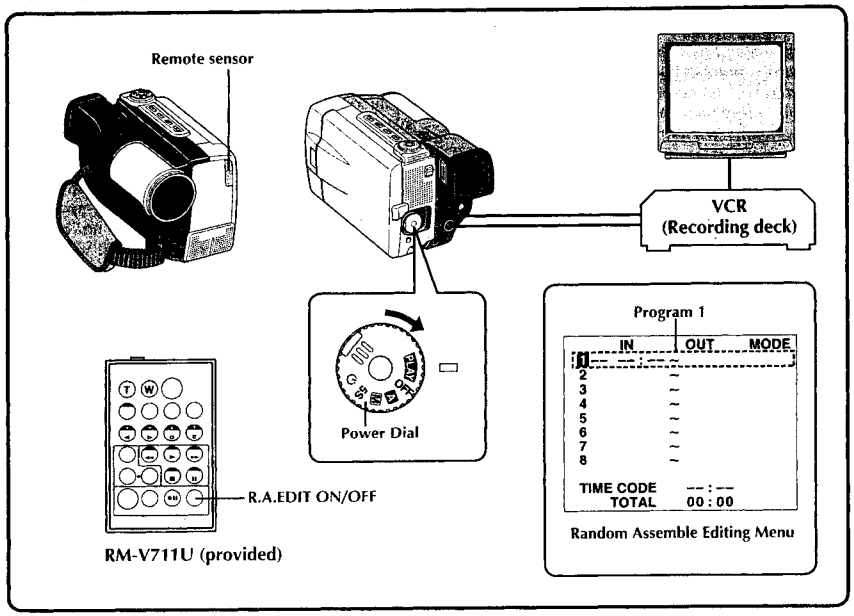

1 PREPARE FOR R.A. EDIT
Play back the tape in the camcorder, then point the remote control at the camcorder's remote sensor and press **R.A. EDIT ON/OFF**.

- "Random Assemble Editing Menu" appears on the TV screen.

2 CHOOSE A SCENE
Perform Random Assemble Editing on Program 1 only. In order to check VCR and camcorder timing, select the beginning of a scene transition as your Edit-In point.

3 PLAY BACK DUBBED SCENE

- If any images from the scene prior to the transition you chose for your Edit-In point were recorded, that means your VCR moves quickly from Record-Pause to Record mode.
- If the scene you tried to dub starts in progress, the VCR is slow to start recording.

Adjustment of VCR's against Camcorder Timing

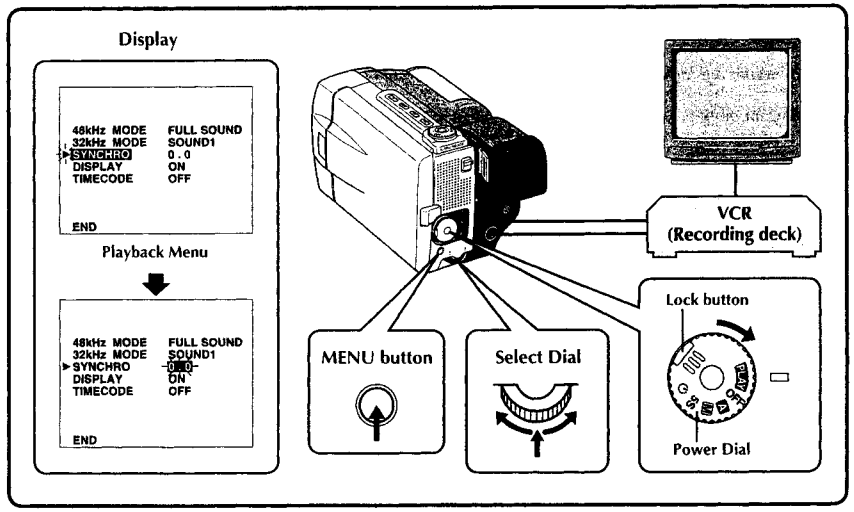

4 ACCESS PLAYBACK MENU
Press **MENU**. The Playback Menu appears on the TV screen.

5 SELECT FUNCTION
Move the pointer and highlight bar to "SYNCHRO" by rotating the Select Dial, then press it. The value for "SYNCHRO" is highlighted.

6 INPUT CORRECTION DATA
Based on the diagnostics performed (☞ pg. 66), you can now increase the VCR's speed by rotating the Select Dial to the right. You can also slow down the VCR's speed by rotating the Select Dial to the left. The adjustment range is from –1.3 to +1.3 seconds, in 0.1-second increments.

7 CLOSE MENU
Press the Select Dial twice.

- Now perform Random Assemble Editing beginning with step **2** on page 63.

NOTES:

- *Before performing actual Random Assemble Editing, do a few Random Assemble Editing trial runs to check whether the value you have input is appropriate or not, and make adjustments accordingly.*
- *Depending on the recorder, there may be situations where the timing difference cannot be fully corrected.*

Audio Dubbing

The audio track can be customized only when recorded on the 32 kHz mode (☞ pg. 35).

NOTES:

- *Audio Dubbing is not possible on a tape recorded at 48 kHz, on a tape recorded in the LP mode or on a blank portion of a tape.*
- *To perform Audio Dubbing while watching in the television, make connections (☞ pg. 56, 57).*

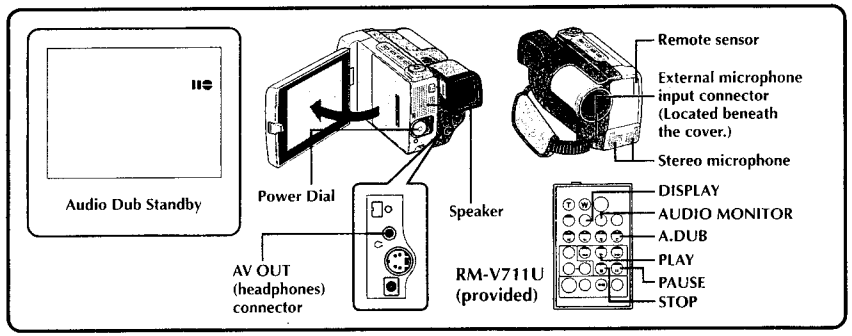

1 FIND EDIT-IN POINT
Play back the tape to locate the point where editing will start, then press **PAUSE**.

2 ENGAGE AUDIO DUB STANDBY
While holding **A. DUB** on the remote control, press **PAUSE**. "II⊖" appears.

3 BEGIN DUBBING
Press **PLAY**, then begin "narrating".

- Speak into the microphone.

4 PAUSE DURING DUBBING
Press **PAUSE**.

5 STOP DUBBING
Press **STOP**.

NOTES:

- *Audio dubbing is possible using an optional microphone connected to the external microphone input connector (MIC).*
- *While an optional microphone is connected, the built-in microphone is disabled.*
- *When editing onto a tape that was recorded at 32 kHz, the old and new soundtracks are recorded separately.*
- *To select the desired sound for playback, press **AUDIO MONITOR** on the remote control.*
- *If you dub onto a blank space on the tape, the sound may be disrupted. Make sure you only edit recorded areas.*
- *If feedback or howling occurs during TV Playback, move the camcorder's microphone away from the TV, or turn down the TV's volume.*
- *Sound is not heard from the speaker during Audio Dubbing. To hear sound, connect optional headphones to the AV OUT (headphones) connector.*
- *If you change from 32 kHz to 48 kHz in mid-recording and then use the tape for Audio Dubbing, it is not effective from the point where 48 kHz recording began.*
- *During Audio Dubbing, when the tape moves to scenes recorded in the LP mode, scenes recorded at 48 kHz or a blank portion, Audio Dubbing stops and "ERROR! REFER MANUAL" appears.*

RECORDING SOUND	DISPLAY	OUTPUT SOUND
32 kHz	FULL SOUND	Original and new tracks are combined and output in stereo.
	SOUND 2	New track is output on both "L" and "R" channels in stereo.
	SOUND 1	Original track is output on both "L" and "R" channels in stereo.

Insert Editing

You can record a new scene into a previously recorded tape, replacing a section of the original recording with minimal picture distortion at the in- and out-points. The original audio remains unchanged.

NOTES:

- *Insert Editing is not possible on a tape recorded in the LP mode or on a blank portion of a tape.*
- *To perform Insert Editing while watching in the television, make connections (☞ pg. 56, 57)*

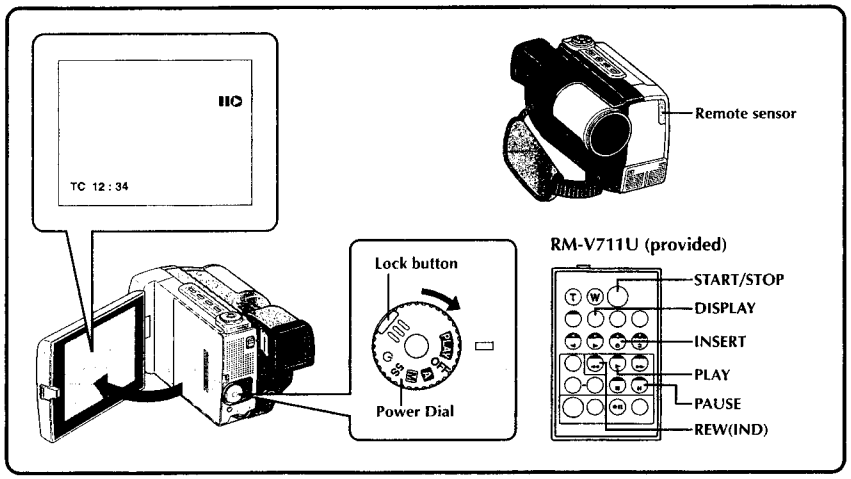

1 FIND EDIT OUT POINT
Playback the tape to locate the point where you want to stop editing. Confirm the time code at this point (☞ pg. 55).

2 FIND EDIT IN POINT
Press **REW** until the point is located, then press **PAUSE**.

3 PREPARE FOR INSERT EDITING
Press and hold **INSERT** on the remote control, then press **PAUSE**. "II⊖" and the Time Code (min.:sec.) appear and the camcorder enters Insert-Pause mode.

4 START RECORDING
Press **START/STOP** to begin editing.

- Confirm the insert at the time code you checked in step **1**.

5 PAUSE DURING EDITING
Press **START/STOP**. The camcorder re-enters Insert Pause mode. Press again to resume editing.

6 STOP EDITING
Press **STOP** while the camcorder is in the Insert-Pause mode.

NOTES:

- *P.AE/Effects (☞ pg. 42) can be used to spice up the scenes being edited during Insert Editing.*
- *To display the Time Code during Insert Editing, ☞ pg. 54.*
- *When performing Insert Editing, the tape's Video Area and Sub-Code Area (☞ pg. 6) are rewritten, so the date and time information changes.*
- *If you perform Insert Editing onto a blank space on the tape, the audio and video may be disrupted. Make sure you only edit recorded areas.*
- *During Insert Editing, when the tape moves to scenes recorded in the LP mode or a blank portion, Insert Edting stops and "ERROR! REFER MANUAL" appears.*

If, after following the steps in the chart below, the problem still exists, please consult your nearest JVC dealer.

SYMPTOM	POSSIBLE CAUSES	CORRECTIVE ACTION
1. No power is supplied.	*1.* • The power is not connected properly. • The battery is dead. • The LCD monitor is not open fully or the viewfinder is not pulled out when recording.	*1.* • Connect the AC Adapter securely (☞ pg. 10). • Replace the dead battery with a fully charged one (☞ pg. 9). • Open the LCD monitor fully or pull out the viewfinder. The LCD monitor turns on/off when it is opened/closed at approx. 90° while the Power Dial is set to any position except "OFF" if the viewfinder is not fully pulled out.
2. "SET DATE/TIME!" appears.	*2.* • The built-in rechargeable clock lithum battery is discharged and the previously set date/time is erased.	*2.* • Connect the camcorder to an AC outlet using the AC Power Adapter/Charger etc. for over 24 hours to charge the clock lithum battery (☞ pg. 11).
3. Recording cannot be performed.	*3.* • The tape's record safety tab is set to "SAVE". • The Power Dial is set to "PLAY". • "TAPE END" appears. • The cassette's cover is open.	*3.* • Set the tape's record safety tab to "REC" (☞ pg. 12). • Set the Power Dial to "A", "M", "5S" or "⏲" (☞ pg. 17). • Replace with new cassette (☞ pg. 12). • Close the cassette's cover.
4. There is no playback picture.	*4.* • The camcorder is not getting power, or some other malfunction exists.	*4.* • Turn the camcorder's power off and on again (☞ pg. 19).
5. Some functions are not available using the **MENU** button.	*5.* • The Power Dial is set to "A".	*5.* • Set the Power Dial to any position except "A" (☞ pg. 17).
6. Some functions are not available using the Select Dial.	*6.* • The Power Dial is set to "A", "5S" and "⏲".	*6.* • Set the Power Dial to any position except "A", "5S" and "⏲" (☞ pg. 17).
7. The focus does not adjust automatically.	*7.* • Focus is set to "MANUAL". • The recording was done in a dark place, or the contrast was low. • The lens is dirty or covered with condensation.	*7.* • Set Focus to "AUTO" (☞ pg. 45). • Clean the lens and check the focus again (☞ pg. 75).
8. The cassette won't load properly.	*8.* • The cassette is in the wrong position. • The battery's charge is low.	*8.* • Set it in the right position (☞ pg. 12). • Install a fully charged battery (☞ pg. 8).
9. Play, Rewind and Fast-Forward functions don't work.	*9.* • The Power Dial is not set to "PLAY".	*9.* • Set the Power Dial to "PLAY" (☞ pg. 50).

SYMPTOM	POSSIBLE CAUSES	CORRECTIVE ACTION
10. The tape is moving, but there's no picture.	*10.* • Your TV has AV input terminals, but is not set to its VIDEO mode. • The cassette's cover is open.	*10.* • Set the TV to the mode or channel appropriate for video playback (☞ pg. 56, 57). • Close the cassette's cover (☞ pg. 12).
11. In the 5-Second mode, recording ends before 5 seconds have elapsed.	*11.* • The 5-Second mode in the System Menu is set to "ANIM.".	*11.* • Select "5S" or "5SD" in the System Menu (☞ pg. 35).
12. Pro Snapshot mode cannot be used.	*12.* • The Squeeze mode is selected.	*12.* • Disengage the Squeeze mode (☞ pg. 32).
13. Digital Zoom doesn't work.	*13.* • 10X optical zoom is selected. • The Video Echo effect is activated. • Picture Wipe or Dissolve are being used in a scene transition. • 5-Second recording was done with the Power Dial set to "5S", and with "5SD" selected in the System Menu. • Pro Snapshot was attempted during Digital Zoom.	*13.* • Turn off the Video Echo effect (☞ pg. 43). • Wait until the Picture Wipe or Dissolve effects are completed (☞ pg. 38). • Change the setting of either the System Menu or the Power Dial (☞ pg. 34). • Do not attempt to take a Pro Snapshot when performing Digital Zoom (☞ pg. 26).
14. P.AE/Effects and Fade/ Wipe Effects don't work.	*14.* • The Power Dial is set to "A". • The Power Dial is set to "5S".	*14.* • Set the Power Dial to "M" (☞ pg. 17). • Change the setting of the Power Dial.
15. The Black & White Fader doesn't work.	*15.* • The Sepia or Monotone effects are activated.	*15.* • Turn off Sepia and Monotone (☞ pg. 42).
16. The Dissolve function doesn't work.	*16.* • P.AE/Effects Sepia, Monotone or Slow are activated. • The Squeeze mode is selected. • The previously selected P.AE/Effect was changed after the last selected scene for editing was registered.	*16.* • Turn off Sepia and Monotone before adding Dissolve to a scene transition (☞ pg. 42). • Make sure that the Squeeze mode in the Recording Menu is set to "OFF" (☞ pg. 32). • Make sure you have selected the P.AE/Effects you want before starting editing (☞ pg. 42).
17. Scene transition does not go as expected.	*17.* • When using "Picture Wipe/ Dissolve" (☞ pg. 38) or "Dissolves during 5 second mode recording" (☞ pg. 26), there is a delay of a fraction of a second between the previous record stop-point and the Dissolve start-point. This is normal, but this slight delay becomes especially noticeable when shooting fast-moving subject or during rapid panning.	*17.* ———

CONTINUED ON NEXT PAGE

SYMPTOM	POSSIBLE CAUSES	CORRECTIVE ACTION
18. The Picture Wipe and Dissolve functions don't work.	**18.** • The last selected editing scene is ending. • At the end of the last selected scene for editing, the Power Dial was set to "OFF". • The power is off.	**18.** • Select Picture Wipe or Dissolve before beginning recording. The effects are then automatically activated (☞ pg. 38). • Do not turn off the camcorder's power after setting Edit-In and Edit-Out points, as they will all be erased (☞ pg. 38). • The camcorder automatically shuts off after 5 minutes have elapsed in the Record-Standby mode. Make sure you continue operations within 5 minutes after engaging Record-Standby mode (☞ pg. 38).
19. The Picture Wipe function doesn't work.	**19.** • The Slow Shutter effect is activated. • The Squeeze or Cinema mode is selected in the Recording Menu.	**19.** • Make sure the Squeeze mode, Cinema mode, or Slow Shutter effect is not activated when preparing to use the Picture Wipe function (☞ pg. 32, 43).
20. Even when Slow Shutter isn't selected, the image looks like it is activated.	**20.** • When shooting in the dark, the unit becomes highly sensitive to light and the image takes on an effect similar to Slow Shutter.	**20.** • If you want the lighting to look more natural, set GAIN UP to "AGC" or "OFF" in the Recording Menu (☞ pg. 32).
21. The Video Echo effect doesn't work.	**21.** • The Picture Wipe or Dissolve functions are in use. • The Squeeze mode is selected in the Recording Menu. • A Fade-In or Fade-Out is in progress (White Fader, Black Fader or Black & White Fader).	**21.** • Make sure the Squeeze mode is set to "OFF" (☞ pg. 32). • Do not try to use the Video Echo effect during a Fade-In or Fade-Out (☞ pg. 36).
22. There is no strobe when the Classic Film and Strobe effects are activated.	**22.** • The Picture Wipe or Dissolve functions are in use.	**22.** • Do not try to use the Classic Film or Strobe effects during a scene transition (☞ pg. 43).
23. White Balance cannot be activated.	**23.** • The Sepia or Monotone effects are activated.	**23.** • Turn off Sepia or Monotone before setting White Balance (☞ pg. 42).
24. When shooting a subject illuminated by bright light, vertical lines appear.	**24.** • This is a result of exceedingly high contrast, and is not a malfunction.	**24.** ———
25. When the screen is under direct sunlight during shooting, the screen becomes red or black for an instant.	**25.** • This is not a malfunction.	**25.** ———

SYMPTOM	POSSIBLE CAUSES	CORRECTIVE ACTION
26. There are disturbances in audio and video.	**26.** • If Audio Dubbing or Insert Editing have been performed repeatedly on the same portion of the tape, disturbance to the sound and picture may result.	**26.** • Use a new, or infrequently used, tape for Audio Dubbing and Insert Editing (☞ pg. 68, 69).
27. During recording, the date/time does not appear.	**27.** • "DISPLAY" is set to "OFF" in the Date/Time Menu. • Interface shooting is performed.	**27.** • Set "DISPLAY" to "ON" in the Date/Time Menu (☞pg. 11). • During interface shooting, the date/time does not appear (☞ pg. 23). • Press the **ON/OFF** button for longer than 1 second to make the indicators appear (☞ pg. 22).
28. The indicators and messages do not appear on screen.	**28.** • "ON SCREEN" is set to "OFF" in the Date/Time Menu.	**28.** • Set "ON SCREEN" to "ON" in the Date/Time Menu (☞ pg. 25). • Press the **ON/OFF** button for longer than 1 second to make the indicators appear (☞ pg. 22).
29. The indicators do not appear on the LCD monitor or in the viewfinder.	**29.** • You have made the indicators disappear.	**29.** • Press the **ON/OFF** button for longer than 1 second to make the indicators appear (☞ pg. 22).
30. Images on the LCD monitor appear dark or whitish.	**30.** • In places subject to low temperature, images become dark due to the characteristics of the LCD monitor. When this happens, the displayed colours differ from those that are actually recorded. This is not a defect of the camcorder. • When the LCD monitor's fluorescent light reaches the end of its service life, images on the LCD monitor become dark. Consult your nearest JVC dealer.	**30.** • Adjust the brightness and angle of the LCD monitor (☞ pg. 22, 23).
31. The rear of the LCD monitor is hot.	**31.** • The light used to illuminate the LCD monitor causes it to become hot.	**31.** • Close the LCD monitor to turn it off or set the Power Dial to "OFF", and let the unit cool down (☞ pg. 19).
32. The indicators and the image colour on the LCD monitor are not clear.	**32.** • This may occur when the surface or the edge of the LCD monitor is pressed.	**32.** ———
33. Images on the LCD monitor are jittery.	**33.** • The speaker volume is too great.	**33.** • Turn the speaker volume down (☞ pg. 51).
34. The LCD monitor and the lens have become dirty (ex. fingerprints).	**34.** ———	**34.** • Wipe them gently with soft cloth. Wiping strongly can cause damage.

CONTINUED ON NEXT PAGE

SYMPTOM	POSSIBLE CAUSES	CORRECTIVE ACTION
35. The LCD monitor indications blink.	*35.* • Certain FADE/WIPE, P.AE/ Effects, DIS and other functions that cannot be used together are selected at the same time.	*35.* • Re-read the sections covering FADE/WIPE, P.AE/ Effects and DIS (☞ pgs. 33, 36 – 43).
36. Coloured bright spots appear all over the LCD monitor.	*36.* • The LCD monitor is made with high-precision technology. However, black spots or bright spots of light (red, green or blue) may appear constantly on the LCD monitor. These spots are not recorded on the tape. This is not due to any defect of the unit. (Effective dots: more than 99.99 %)	*36.* ———
37. The LCD monitor indications are distorted.	*37.* • During playback of the unrecorded portion, High-speed Search and still playback, LCD monitor indications appear distorted. This is not a defect.	*37.* ———
38. An unusual mark appears in the LCD monitor or the viewfinder.	*38.* ———	*38.* • Check the section of the manual that explains LCD monitor/viewfinder indications (☞ pgs. 79 – 81).
39. An error indication (E01 — E07) appears in the LCD monitor or the viewfinder.	*39.* • A malfunction of some kind has occurred. In this case the camcorder's functions become unusable.	*39.* • Remove the power supply (battery pack, etc.) and press RESET button, and wait a few minutes for the indication to clear. When it does, you can resume using the camcorder. If the indication remains even though you repeat the above two or three times, please consult your nearest JVC dealer.
40. The charge indicator on the AC Power Adapter/ Charger does not light.	*40.* • The temperature of the battery is extremely high/ low. • Charging is difficult in places subject to extremely high/low temperatures.	*40.* • To protect the battery, it is recommended to charge it in places with a temperature of 10°C to 30°C (☞ pg. 9).
41. The recording mode indicator "LP" blinks on the LCD monitor or the viewfinder.	*41.* • This occurs when recording in the LP mode is not available. After the indicator blinks, the recording mode switches to "SP" and recording goes on.	*41.* ———
42. Picture does not appear on the LCD monitor.	*42.* • The viewfinder is pulled out. • The LCD monitor's brightness setting is too dark.	*42.* • Push the viewfinder back in. • Adjust the brightness of the LCD monitor (☞ pg. 22). • If the monitor is tilted upward 180 degrees, open the monitor fully (☞ pg. 23).
43. When the image is printed from the printer, a black bar appears at the bottom of the screen.	*43.* • This is not a malfunction.	*43.* • By recording with Digital Image Stabilizer set to "ON" (☞ pg. 33) this can be avoided.

Cleaning The Camcorder

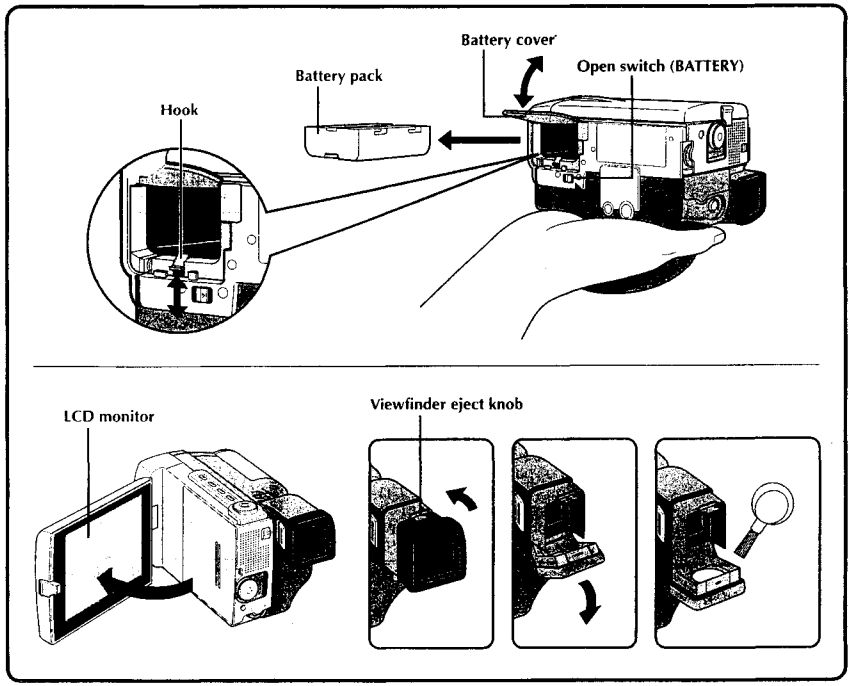

1 REMOVE POWER SUPPLY
Remove the battery pack or disconnect the AC Power Adapter/Charger (☞ pg. 8, 9).

2 CLEAN EXTERIOR
Wipe gently with a soft cloth.

• Put cloth in diluted mild soap and wring it well to wipe off heavy dirt. Then wipe again with a dry cloth.

3 CLEAN LENS
Blow it with a blower brush, then wipe gently with lens cleaning paper.

4 PULL OUT VIEWFINDER
Pull out the viewfinder fully.

5 CLEAN VIEWFINDER
Use a small screwdriver to lift the viewfinder eject knob up and clean the viewfinder with a lens blower or a soft cloth.

6 PUSH VIEWFINDER BACK IN
Return the viewfinder eject knob to its original position and push the viewfinder back in.

7 OPEN LCD MONITOR
Open the LCD monitor fully.

8 CLEAN LCD MONITOR
With soft cloth, gently wipe the LCD monitor in a semicircular pattern. Avoid using too much pressure as this will smear the monitor screen, making it much more difficult to clean.

9 CLOSE LCD MONITOR

NOTES:

- *Avoid using strong cleaning agents such as benzine or alcohol. This may damage the unit's body or cause malfunction.*
- *When using a cleaner or chemically treated cloth refer to the cautions of each product.*

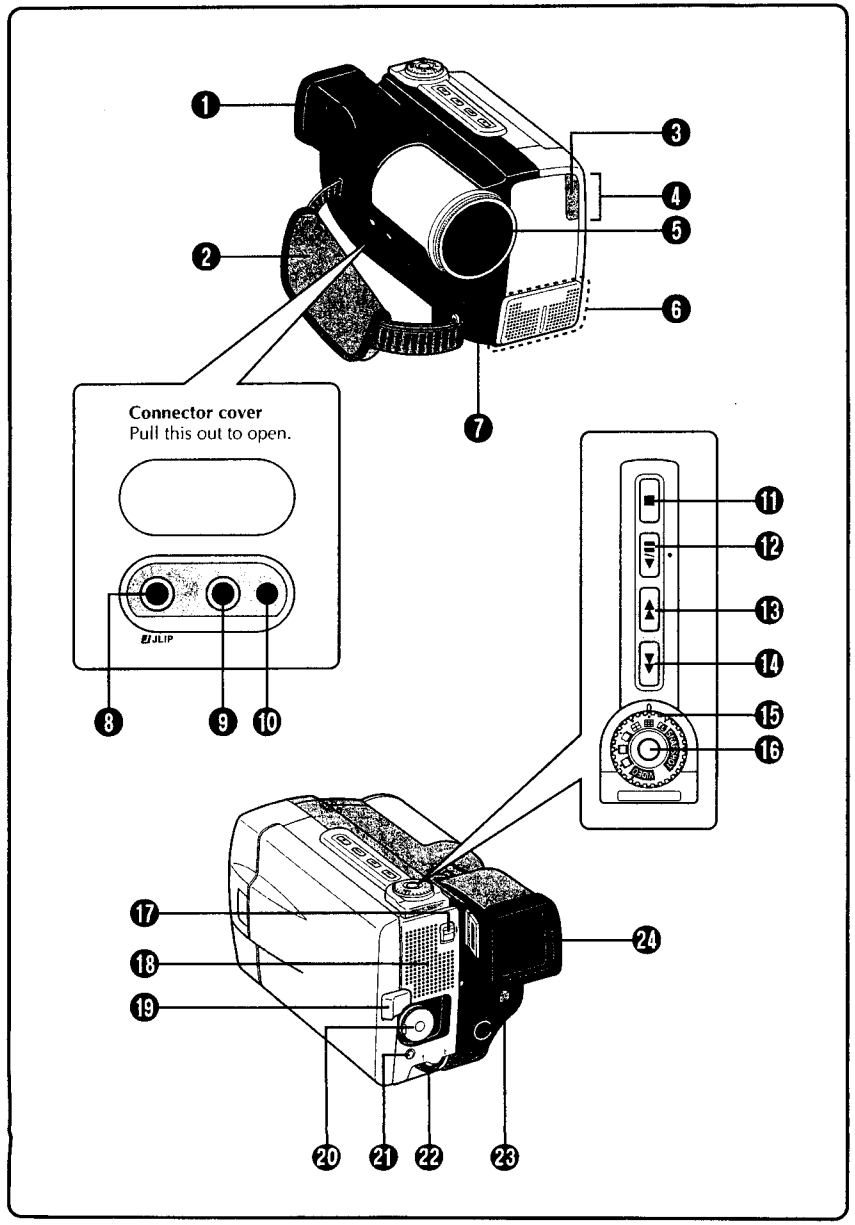

① **Zoom switch or volume switch (VOL.) (☞ pg. 24, 50)**
Adjusts zoom during recording or the sound volume during playback.

② **Grip strap (☞ pg. 14)**

③ **Tally lamp**
Lights during recording.

④ **Remote sensor (☞ pg. 52)**
Receives the signal from the remote control. When using the remote control, point it at the remote sensor.

⑤ **Lens cover**
Opens when the viewfinder is pulled out or the LCD monitor is opened fully.

⑥ **Stereo microphone (☞ pg. 68)**
For use when recording or audio dubbing.

⑦ **External microphone input connector (MIC) (Stereo) (☞ pg. 68)**
An optional microphone can be connected.

⑧ **JLIP (Joint Level Interface Protocol) (DIGITAL STILL) output connector (☞ pg. 58)**
Outputs the digital still image to a personal computer.

⑨ **EDIT jack**
Using an editing cable, connect to the remote control or VCR (☞ pg. 63)

⑩ **RESET button (☞ pg. 74)**
When a malfunction occurs, press this button after removing the power supply (battery etc.). Pressing this button also resets the date/time or various settings.

⑪ **Stop button (■) (☞ pg. 50)**
Stops playback of the tape.

⑫ **Play/Pause button (II/▶) (☞ pg. 50)**
Plays back or stops the tape temporarily.

⑬ **Fast-Forward button (▶▶) (☞ pg. 50)**
Fast-Forwards the tape.

⑭ **Rewind button (◀◀) (☞ pg. 50)**
Rewinds the tape.

⑮ **Progressive Dial (PROGRESSIVE) (☞ pg. 28, 44)**
Turn for Progressive Video Recording or Pro Snapshot Recording.

⑯ **Progressive Button (☞ pg. 28, 44)**
When this button is pressed, the camcorder starts Progressive Mode Recording (high resolution). When pressed during playback, a playback snapshot is taken.

⑰ **OPEN/EJECT switch (☞ pg. 12)**
Slide the switch down when loading/unloading a tape.

⑱ **Speaker (☞ pg. 50)**
During playback, the sound can be heard.

⑲ **PUSH-OPEN Button (☞ pg. 12)**
Press to open the LCD monitor.

⑳ **Power dial (☞ pg. 18)**
Turning the camcorder on/off, recording or playback is possible.

㉑ **MENU button (☞ pg. 31)**
Press this button to make the Menu appear.
ON/OFF button (☞ pg. 22)
Press and hold this button for more than approx. 1 second to make the indications appear on the LCD monitor or the viewfinder.

㉒ **Function Navigator Dial (Select Dial) (☞ pg. 22, 31)**
Adjusts the brightness of the LCD monitor or selects the Menu etc. Referred to in this manual as "Select Dial".

㉓ **START/STOP button (☞ pg. 18)**
Starts recording or stops recording to make the camcorder enter the record-standby mode.

㉔ **Viewfinder (☞ pg. 15)**
Pull out when recording.

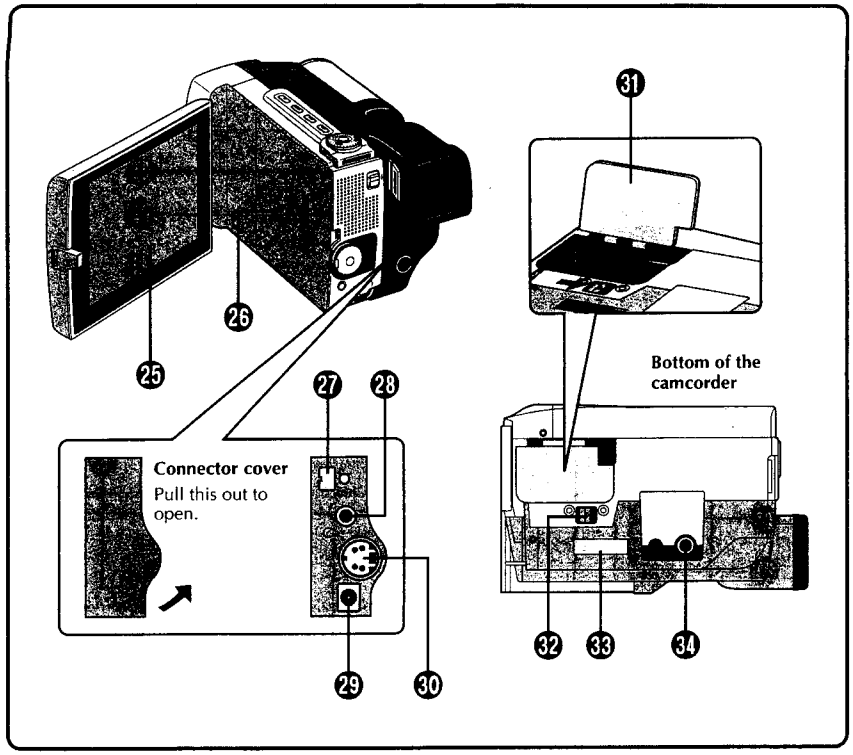

㉕ **LCD monitor (☞ pg. 22)**
The image appears during recording or playback.

㉖ **Cassette cover (☞ pg. 12)**

㉗ **DV OUT connector (☞ pg. 58, 59, 61)**
Connect to a video unit equipped with a DV connector.

㉘ **Video/audio output connector or headphones connector (∩/AV-OUT) (☞ pg. 56, 57, 68)**
The provided VIDEO/AUDIO cable (ø3.5) can be connected to a television etc. Using optional headphones, you can listen to the sound. However, headphones equipped with volume control cannot be used.

㉙ **DC IN jack (☞ pg. 10)**
The DC cord of an AC Power Adapter can be connected.

㉚ **S2 (S-VIDEO) OUT connector (☞ pg. 56, 57, 63)**
Connect to a video unit equipped with an S-Video connector.

㉛ **Battery cover (☞ pg. 9)**
Open the battery cover to insert the battery.

㉜ **Battery cover open switch (BATTERY) (☞ pg. 9)**
Slide in the direction of the arrow to open the battery cover.

㉝ **Power Pack (MULTI) connector (☞ pg. 10)**
Attach to the Power Pack (optional).

㉞ **Tripod mounting socket (☞ pg. 14)**

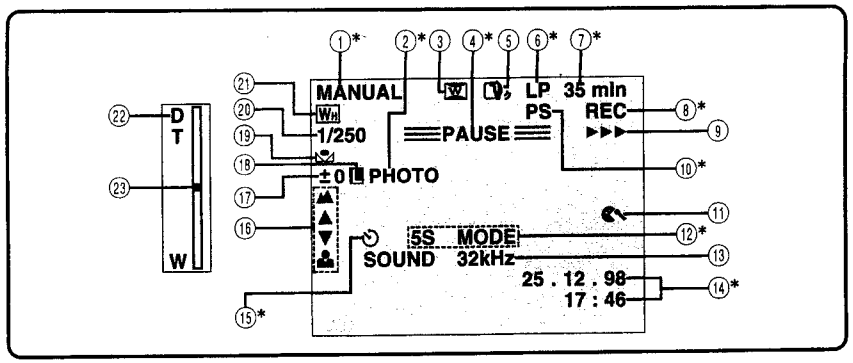

LCD Monitor/Viewfinder Indications During Recording

No.	FUNCTION	
①*	Displays the operation mode position.	(☞ pg. 17)
②*	Appears when taking a Pro Snapshot.	(☞ pg. 28)
③	Appears when in the Squeeze or Cinema mode.	(☞ pg. 32)
④*	Appears when in the Record-Standby mode.	(☞ pg. 18)
⑤	Appears when Digital Image Stabilizer is engaged.	(☞ pg. 33)
⑥*	Displays the recording mode (SP or LP).	(☞ pg. 13)
⑦*	Displays the tape remaining time. During Interface Shooting (☞ pg. 23), when the tape remaining time reaches 2 minutes, this indication is shown as follows; 2 min. → 1 min. → 0 min.	
⑧*	Appears during recording.	(☞ pg. 18)
⑨	Appears while the tape is running.	(☞ pg. 18)
⑩*	Appears when Progressive Video Recording is selected.	(☞ pg. 44)
⑪	Appears when the wind cut mode is engaged to cut down on noise created by wind.	(☞ pg. 35)
⑫*	Displays the 5 second mode recording or animation recording mode.	(☞ pg. 26)
⑬	Displays the sound mode for approx. 5 seconds after turning on the camcorder.	(☞ pg. 35)
⑭*	Displays the date/time.	(☞ pg. 25)
⑮*	Appears during self-timer recording.	(☞ pg. 27)
⑯	Appears when the focus is adjusted manually.	(☞ pg. 45)
⑰	Appears when the exposure is adjusted.	(☞ pg. 46)
⑱	Appears when the iris is locked.	(☞ pg. 47)
⑲	Appears when the white balance is adjusted.	(☞ pg. 48)
⑳	Displays the selected P.AE/Effect.	(☞ pg. 42)
㉑	Displays the selected Fade/Wipe effect.	(☞ pg. 36)
㉒	Appears when Digital Zoom is activated.	(☞ pg. 33)
㉓	Appears during zooming.	(☞ pg. 25)

* :Pressing **ON/OFF** for longer than 1 second lets you remove indications marked with * from the screen.

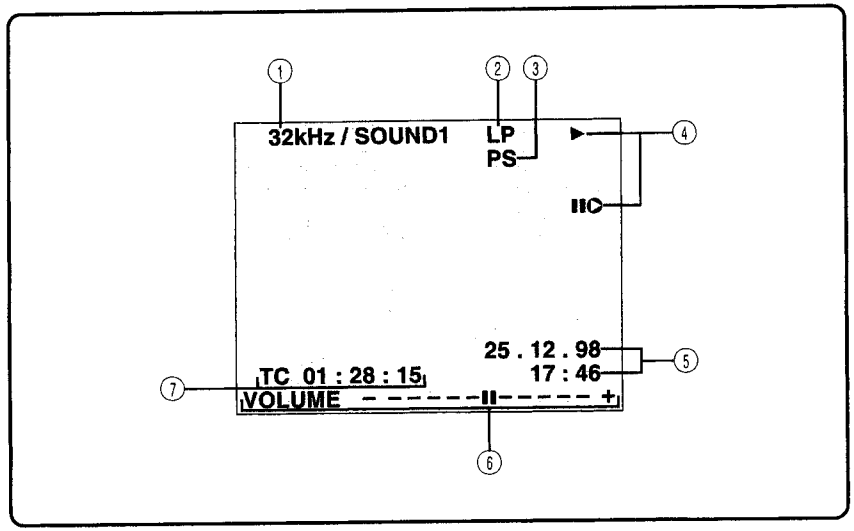

LCD Monitor/Viewfinder Indications During Playback

No.	FUNCTION
①	Displays the sound mode. (☞ pg. 55)
②	Displays the recording mode of the tape being played back.
③	Appears during playback of scenes recorded in the Progressive Mode.
④	Appears while a tape is running. ▶ : Playback ▶▶ : Fast-Forward/High-speed search ◀◀ : Rewind/High-speed search II▶ : Forward slow-motion II◀ : Reverse slow-motion II : Pause O : Insert ⊖ : Audio Dubbing
⑤	Displays the date/time. (☞ pg. 55)
⑥	Displays the brightness of the LCD monitor or the speaker volume. (☞ pg. 22, 50)
⑦	Displays the time code. (☞ pg. 55)

Warning Indications

INDICATIONS	FUNCTION
	Displays the battery remaining power. Remaining power level: high Remaining power level: exhausted As the battery power comes close to nil, the battery indicator blinks. When the battery power is exhausted, power turns off automatically.
	Appears when no tape is loaded, or when the erase protection tab is set to "SAVE". (☞ pg. 12)
	Appears if dirt is detected on the heads during recording. (☞ pg. 83)
	Appears if condensation occurs. When this indication is displayed, the camcorder turns off automatically.
TAPE!	Appears for 10 seconds after power is turned on if there's no tape loaded.
TAPE END	Appears when the tape ends during recording or playback. (☞ pg. 22)
SET DATE/TIME!	• Appears when the date/time is not set. (☞ pg. 11) • Appears when the built-in rechargeable battery is discharged and the previously set date/time is erased. (☞ pg. 11)
ERROR! REFER MANUAL	• Appears when Audio Dubbing is unavailable. (☞ pg. 68) • Appears when Insert Editing is unavailable. (☞ pg. 69)
E01 — E07	The error indications (E01 — E07) show what type of malfunction has occured. When an error indication appears, the camcorder turns off automatically. Press the reset button after removing the power supply (battery, etc.), and wait a few minutes for the indication to clear. When it does, you can resume using the camcorder. If the indication remains, consult your nearest JVC dealer. (☞ pg. 74)

Battery Packs

The supplied battery pack is a lithium-ion battery. Before using the supplied battery pack or an optional battery pack, be sure to read the following cautions:

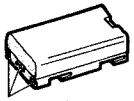
Terminals

1. **To avoid hazard . . .**
   .... **do not** burn.
   .... **do not** short-circuit the terminals.
   .... **do not** modify or disassemble.
   .... **do not** expose the battery to temperatures exceeding 60°C, as this may cause the battery to overheat, explode or catch fire.
   .... use only specified chargers.
2. **To prevent damage and prolong service life . . .**
   .... **do not** subject to unnecessary shock.
   .... charge in an environment where temperatures are within the tolerances shown in the chart below. This is a chemical reaction type battery—cooler temperatures impede chemical reaction, while warmer temperatures can prevent complete charging.
   .... store in a cool, dry place. Extended exposure to high temperatures will increase natural discharge and shorten service life.
   .... fully charge and then fully discharge the battery once a year when storing the battery pack over a long period time.
   .... remove from charger or powered unit when not in use, as some machines use current even when switched off.

NOTES:

- *It is normal for the battery pack to be warm after charging, or after use.*

  Temperature Range Specifications
  Charging ..... 10°C to 35°C
  Operation ..... 0°C to 40°C
  Storage ..... –10°C to 30°C
- *Recharging time is based on room temperature of 20°C.*
- *The lower the temperature, the longer recharging takes.*

How To Handle A CD-ROM

- Take care not to soil or scratch the mirror surface (opposite to the printed surface). Do not write anything or put a sticker on either the front or back surface. If the CD-ROM gets dirty, gently wipe it with a soft cloth outward from the centre hole using a circular motion.
- Do not use conventional disc cleaners or cleaning spray.
- Do not bend the CD-ROM or touch its mirror surface.
- Do not store your CD-ROM in a dusty, hot or humid environment. Keep it away from direct sunlilght.

Cassettes

To properly use and store your cassettes, be sure to read the following cautions:

1. **During use . . .**
   .... make sure the cassette bears the Mini DV mark.
   .... be aware that recording onto prerecorded tapes automatically erases the previously recorded video and audio signals.
   .... make sure the cassette is positioned properly when inserting.
   .... do not load and unload the cassette repeatedly without allowing the tape to run at all. This slackens the tape and can result in damage.
   .... do not open the front tape cover. This exposes the tape to fingerprints and dust.
2. **Store cassettes . . .**
   .... away from heaters or other heat sources.
   .... out of direct sunlight.
   .... where they won't be subject to unnecessary shock or vibration.
   .... where they won't be exposed to strong magnetic fields (such as those generated by motors, transformers or magnets).
   .... vertically, in their original cases.

Main Unit

1. **For safety, DO NOT . . .**
   .... open the camcorder's chassis.
   .... disassemble or modify the unit.
   .... short-circuit the terminals of the battery pack. Keep it away from metallic objects when not in use.
   .... allow inflammables, water or metallic objects to enter the unit.
   .... remove the battery pack or disconnect the power supply while the power is on.
   .... leave the battery pack attached when the camcorder is not in use.
2. **Avoid using the unit . . .**
   .... in places subject to excessive humidity or dust.
   .... in places subject to soot or steam such as near a cooking stove.
   .... in places subject to excessive shock or vibration.
   .... near a television set.
   .... near appliances generating strong magnetic or electric fields (speakers, broadcasting antennas, etc.).
   .... in places subject to extremely high (over 40°C) or extremely low (under 0°C) temperatures.

3. **DO NOT leave the unit . . .**
   .... in places of over 50°C (122°F).
   .... in places where humidity is extremely low (below 35%) or extremely high (above 80%).
   .... in direct sunlight.
   .... in a closed car in summer.
   .... near a heater.
4. **To protect the unit, DO NOT . . .**
   .... allow it to become wet.
   .... drop the unit or strike it against hard objects.
   .... subject it to shock or excessive vibration during transportation.
   .... keep the lens directed at extremely bright objects for long periods.
   .... expose the lens to direct sunlight.
   .... carry it by holding the LCD monitor or the viewfinder.
   .... swing it excessively when using the hand strap or the grip.
   .... swing the soft camera case excessively when the camcorder is inside it.
5. **Dirty heads can cause the following problems:**

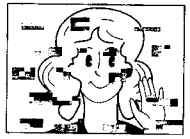
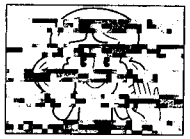

- No picture and no sound during playback (blueback).
- Blocks of noise appear during playback.
- During recording, the Head Clog Warning indicator "⊗" appears.

In such cases, use the optional Cleaning Cassette. Insert it and play back. If the cassette is used more than once consecutively, damage to the video heads may result. After the camcorder plays back for about 20 seconds, it stops automatically. Also refer to the Cleaning Cassette's instructions.
If, after using the Cleaning Cassette, the problems still exist, consult your nearest JVC dealer.
Mechanical moving parts used to move the video heads and video tape tend to become dirty and worn out over time. In order to maintain a clear picture at all times, periodic check-ups are recommended after using the unit for about 1,000 hours. For periodic check-ups please consult your nearest JVC dealer.

LCD monitor

1. **To prevent damage to the LCD monitor, DO NOT . . .**
   .... push it strongly or apply any shocks.
   .... place the camcorder with the LCD monitor on the bottom.
2. **To prolong service life . . .**
   .... avoid rubbing it with coarse cloth.
3. **Be aware of the following phenomena for LCD monitor use.**
   These are not malfunctions . . .

- While using the camcorder, the surface around the LCD monitor and/or the back of the LCD monitor may heat up.
- If you leave power on for a long time, the surface around the LCD monitor becomes hot.

About moisture condensation . . .

- You have observed that pouring a cold liquid into a glass will cause drops of water to form on the glass' outer surface. This same phenomenon occurs on the head drum of a camcorder when it is moved from a cool place to a warm place, after heating a cold room, under extremely humid conditions or in a place directly subjected to the cool air from an air conditioner.
- Moisture on the head drum can cause severe damage to the video tape, and can lead to internal damage to the camcorder itself.

Serious malfunctioning

If malfunctioning occurs, stop using the unit immediately and consult your local JVC dealer.

The camcorder is a microcomputer-controlled device. External noise and interference (from a TV, a radio, etc.) might prevent it from functioning properly. In such cases, first disconnect its power supply unit (battery pack, AC Power Adapter/Battery Charger, etc.) and press the RESET button and then re-connect it and proceed as usual from the beginning.

CAMCORDER

General

Power	: DC 6.3 V⎓ (using AC Adapter) DC 7.2 V⎓ (using Battery)
Power consumption	: 6.3 W (viewfinder on), 8.2 W (LCD monitor on)
Format	: DV Format (SD mode)
Signal format	: PAL Standard
Video signal recording format	: Digital Component Recording
Cassette	: MINI DV Cassette
Tape Speed	: SP: 18.8 mm/s LP: 12.5 mm/s
Maximum recording time	: SP: 60 min. LP: 90 min. (using DVM-60 cassette)
Pickup	: 1/3" CCD (Progressive Scan CCD)
Lens	: F1.2, f = 5 to 50 mm, 10:1 Power Zoom Lens
Filter diameter	: ø58 mm (when using the optional lens adapter GL-V5842U)
LCD monitor	: 4", 112,000 pixel TFT/LCD panel
Viewfinder	: 0.55" colour LCD, 113,000 pixel
Operating temperature	: 0 to 40°C
Operating humidity	: 35 to 80%
Storage temperature	: –20 to 50°C
Dimensions	: 86 (W) x 86 (H) x 145 (D) mm
Weight	: Approx. 670 g (without cassette and battery) Approx. 780 g (incl. cassette and battery)

Video

Output	: 1 Vp-p, 75 Ω unbalanced, analogue output (via ø3.5 mm AV output jack)
S2 VIDEO output	: Y: 1 Vp-p, 75 Ω, analogue output C: 0.29 Vp-p, 75 Ω, analogue output
DV output	: 4-pin, IEEE1394 conformant, digital output
Digital still output	: ø3.5 mm, 4-pole, mini-head jack (compatible with RC-5325 plug)

Audio

Output	: –8 dBs, 1 kΩ analogue output (via ø3.5 mm AV output jack)
Headphone output	: Stereo (via ø3.5 mm AV output jack)
External microphone input	: –62 dBs, high impedance unbalanced with ø3.5 mm (STEREO)
Speaker	: Monaural

AC ADAPTER/CHARGER

Power	: AC 110 to 240 V∿, 50/60 Hz
Power consumption	: 20 W
Output power	: DC 7.2 V⎓, 1.2 A (charge) : DC 6.3 V⎓, 1.8 A (VTR)
Operating temperature	: 0°C to 40°C (when charging, 10°C to 35°C)
Dimensions	: 94 mm (W) x 36 mm (H) x 122 mm (D)
Weight	: Approx. 270 g

Specifications shown are for SP mode unless otherwise indicated. E & O.E. Design and specifications subject to change without notice.

Iris
Works like the pupil of the human eye. In a well-lit environment, the human pupil contracts to keep too much light from entering. In low lighting, the pupil dilates to allow more light in.

Colour temperature
A measurement in Kelvin degrees which indicates the colour contents of a light source; bluish light has a higher colour temperature than reddish light. To reproduce white as white under different types of lighting, the chrominance signal must be adjusted to match the light source's colour temperature.
(See "White Balance".)

AC Adapter
Used when charging the battery. Or, when connected directly to the camcorder, it can be used as a power supply.

Auto focus
Focus can be set for automatic adjustment, for beginners who find the adjustment difficult.

On-screen display
Displays in the viewfinder or the LCD monitor can be shown on a connected TV.

Strobe
In the early days of movie making, 1-second strobes were uncommon, so movies didn't have the smooth movement they have today. This function gives movies the old-film flicker effect.

Record-Standby
Engage this mode by pressing START/STOP during Stop or Record modes. It means that the camcorder, or your VCR, is paused and ready to record.

CCD (Charge coupled device)
Solid-state imaging device used in camcorders as the camera's image pickup; analogous to the eye's retina except that picture information is output as electric signals.

Dew sensor
If condensation forms inside the unit due to a temperature change, the indicator appears in the viewfinder or the LCD monitor, and the camcorder becomes unusable.

Digital zoom
10X Optical zoom image is taken and digitally processed to provide 40X or 100X magnified images.

Digital Image Stabilizer
When shooting while holding the camcorder in your hand, even if you think you're perfectly still, there is slight movement. This function compensates for that movement.

Fade
An effect used in scene transitions. Like movies or TV, the scene gradually goes black or white (fade out), or comes in from a black or white screen (fade in).

White balance
A term that refers to the correctness of colour reproduction under various lighting. If the white balance is correct, all other colours will be accurately reproduced.

Wipe
An effect used in scene transitions. A scene disappears as though it's being wiped off the screen (wipe out), or appears as though it's wiped on (wipe in).

A

Animation ☞ pg. 35
Audio Dubbing ☞ pg. 68
Auto Focus ☞ pg. 45
Auto Shut off ☞ pg. 19

B

Battery ☞ pg. 8
Battery Low ☞ pg. 81
Beep/Tally ☞ pg. 35

C

Charging ☞ pg. 8
Cleaning The Camcorder ☞ pg. 75
Connections ☞ pg. 10, 56 – 59, 61

D

Date/Time Display ☞ pg. 25, 55
Date/Time Settings ☞ pg. 11
Digital Dubbing ☞ pg. 61
Digital Image Stabilizer ☞ pg. 33
Digital Zoom ☞ pg. 33
Dubbing ☞ pg. 60, 61

E

Editing ☞ pg. 60, 61
Exposure Control ☞ pg. 46

F

5SD ☞ pg. 26
5-Second Mode ☞ pg. 26
Fade-In/Out ☞ pg. 37
Focus Adjustment ☞ pg. 45

I

Insert Editing ☞ pg. 69
Iris ☞ pg. 47
Iris Lock ☞ pg. 47

L

LCD monitor/Viewfinder indications ☞ pg. 79 – 81
Lithium Battery ☞ pg. 2, 3, 82
Loading A Tape ☞ pg. 12

M

Motor Drive Mode ☞ pg. 29

O

On-Screen Menus ☞ pg. 31 – 35, 53
Operation Mode ☞ pg. 17

P

P.AE/Effects ☞ pg. 42, 43
Photo Frame ☞ pg. 29
Playback Zoom ☞ pg. 52
Power (AC/Battery) ☞ pg. 9, 10
Progressive Video Recording ☞ pg. 44
Pro Snapshot Mode ☞ pg. 28

R

Random Assemble Editing ☞ pg. 63 – 67
Record Safety Tab ☞ pg. 12
Record-Standby ☞ pg. 19
Recording Format ☞ pg. 6
Remote Control ☞ pg. 16

S

Self-Timer ☞ pg. 27
Set VCR Brand ☞ pg. 62
Slow Motion Playback ☞ pg. 51
Slow Shutter ☞ pg. 43
Sound Mode ☞ pg. 35
Squeeze ☞ pg. 32
Still Playback ☞ pg. 51
Strobe ☞ pg. 43

T

Tapes ☞ pg. 12
Time Code ☞ pg. 6, 21

W

White Balance ☞ pg. 48, 49
Wide Mode ☞ pg. 32
Wipe In/Out ☞ pg. 37

MEMO

SECTION 1
DISASSEMBLY

1.1 BEFORE ASSEMBLY AND DISASSEMBLY

1.1.1 Precautions

1. Be sure to remove the power supply unit prior to mounting and soldering of parts.
2. When connecting and disconnecting the connectors, be careful not to damage the wire.
3. When replacing chip parts (especially IC parts), desolder completely first (to prevent peeling of the pattern).
4. Tighten screws properly during the procedures.
   Unless specified otherwise, tighten screws at a torque of 0.1N•m (1.0 kgf•cm).

1.1.2 Assembly and disassembly

STEP /LOC NO.	PART	Fig. No.	REMOVAL	
			*UNLOCK/RELEASE/ UNPLUG/UNCLAMP/ UNSOLDER	Note
①	HOOD CAP	C1	–	Note 1,2
②	AL PLATE	C1	2(L1)	Note 1,2
③	FRONT COVER ASSEMBLY	C2	2(S1), (S2), (S3), (S4), 2(S5) * GRIP BELT * CAP (MICROPHONE) * CONNECTOR Ⓐ, Ⓑ	Note 3,4,5,6,7
①	②	③	④	⑤

① : Indicate the disassembly steps. When assembling, perform in the reverse order of these steps. This number corresponds to the number in the disassembly diagram.

② : Indicates the name of disassembly/assembly parts.

③ : Indicates the number in the disassembly diagram.

④ : Indicates parts and points such as screws, washers, springs which must be removed during disassembly/assembly.
P = Spring
W = Washer
S = Screw
*Lock (L), soldering (SD), shield, connector, etc.

[Example] • Remove (W1) = Washer W1.
• Remove (SD1) = Soldering at the point SD1.
• Connector Ⓐ = Disconnector the connector Ⓐ.

⑤ : Precautions on disassembly/assembly.

1.1.3 Disconnection of Connectors (Wires)

Connector

Pull both ends of the connector in the arrow direction, remove the lock and disconnect the flat wire.

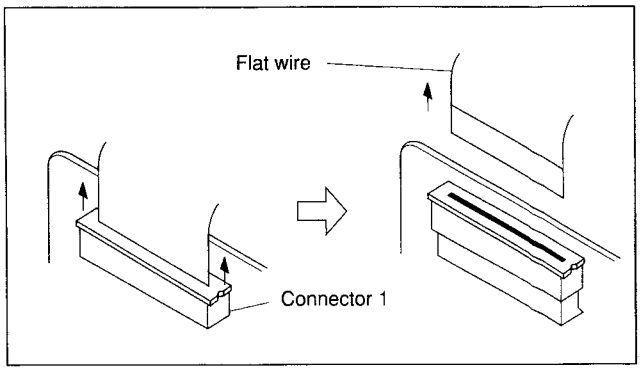

Fig. 1-1-1 Connector 1

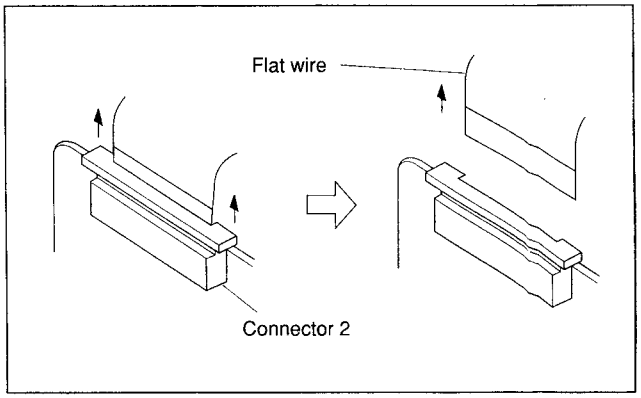

Fig. 1-1-2 Connector 2

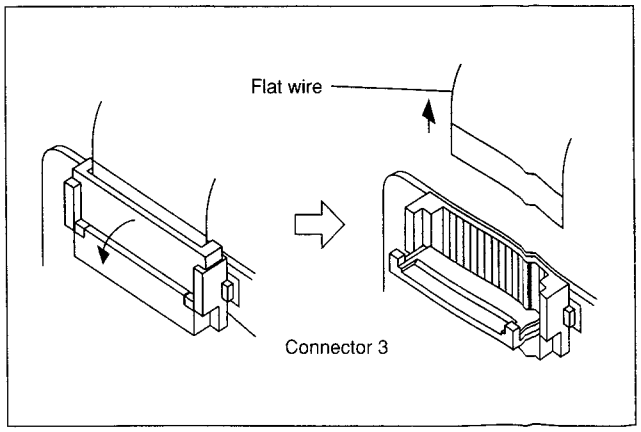

Fig. 1-1-3 Connector 3

1.1.4 Screws used in assembly of cabinet parts and boards

The following Table 1-1-1 shows the symbols, shapes, and parts numbers of the screws used in the disassembly and assembly diagrams of cabinet parts and board assemblies. Prior to assembly, check the following table and be sure to use the correct screw.

SYMBOL	SHAPE	PARTS NO	COLOR
(S1)		QYSPSPT1725Z	Gold
(S2)		QYSPSGT1780D	Black
(S3)		QYSPSPT1740D	Black
(S4)		QYSPSPT1740R	Silver
(S5)		QYSPSGT1750R	Silver
(S6)		QYSPSGT1740Z	Gold
(S7)		QYSLSF2055D	Black
(S8)		LY30018-011A	Black
(S9)		QYSPSPU2640M	Black
(S10)		QYSPSGT1725Z	Gold
(S11)		LY30018-014A	Gold
(S12)		QYSPSPT1718D	Black
(S13)		QYSPSPT1730D	Black
(S14)		LY30018-005A	Black
(S15)		LY30018-036A	Black
(S16)		LY30018-028A	Silver
(S17)		QYSPSPT1735R	Silver
(S18)		QYSPSPT1740R	Silver
(S19)		QYSLSF1750D	Black
(S20)		QYSPSPT1730R	Silver
(S21)		LY30018-009A	Gold
(S22)		LY30019-008A	Black
(S23)		QYSPSPT1720Z	Gold
(S24)		LY30019-005A	Gold
(S25)		QYSPSPT1720R	Gold
(S26)		LY30019-003A	Gold
(S27)		YQ43893	Silver
(S28)		LY30019-002A	Black
(S29)		SPSN2080D	Black
(S30)		PTY30535-016	Black
(S31)		PTY30535-010	Black
(S32)		PTY30535-003	Black

Table 1-1-1

1.2 TOOLS REQUIRED FOR ADJUSTMENTS

1 ALIGNMENT TAPE MC-2	2 GUIDE DRIVER YTU94085
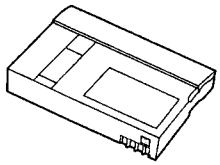	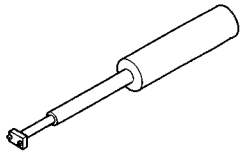
3 TORQUE DRIVER YTU94088	4 BIT – YTU94088-003
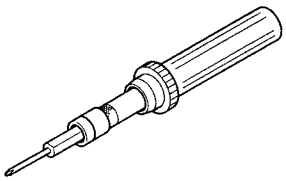	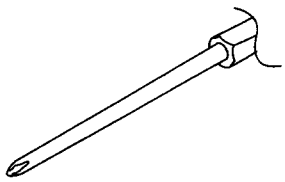
5 PATCH CORD YTU93092A	6 SERVICE SUPPORT SYSTEM SOFTWARE YTU94057-27
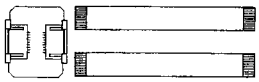	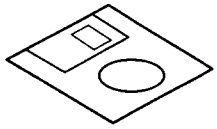
7 INF ADJUSTMENT LENS YTU92001B	8 COLOR BAR CHART YTU92001-051
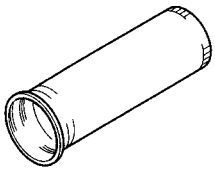	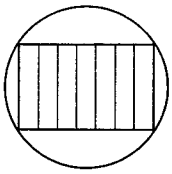
9 GRAY SCALE CHART YTU92001-052	10 WHITE BALANCE CHART YTU92001-053
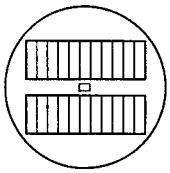	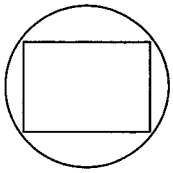
11 INF LENS HOLDER YTU94087	12 LIGHT BOX YTU93072A-1
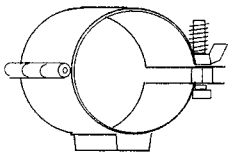	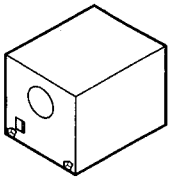
13 CAMERA STAND YTU93079	14 ERROR RATE JIG YTU93083
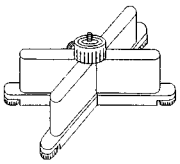	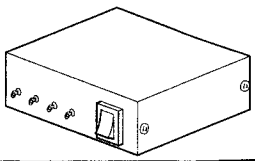

Table 1-2-1

15	SOLDERING KIT YTU96016C	16	CLEANING CLOTH KSMM-01
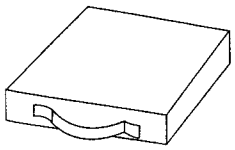		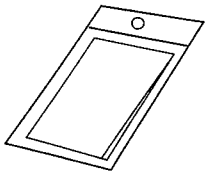	
17	PC CABLE QAM0099-002	18	JLIP CONNECTOR CABLE YTU93091A
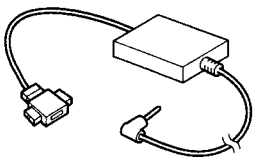		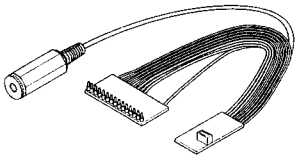	

Table 1-2-2

1. Alignment tape
   To be used for check and adjustment of interchangeability of the mechanism.
   (Video: Color bar signal, Audio: Non-signal)

2. Guide driver
   To be used to turn the guide roller for adjustment of the linearity of playback envelope

3. Torque driver
   Be sure to use to fastening the mechanism and exterior parts because those parts must strictly be controlled for tightening torque.

4. Bit
   This bit is slightly longer than those set in conventional torque drivers.

5. Patch cord
   To be used to connect electrical parts, P.C. boards, etc. for servicing.

6. Service support system software
   To be used for adjustment with a personal computer.

7. INF adjustment lens
   To be used for adjustment of the camera system.

8. Color bar chart
   To be used for adjustment of the camera system.

9. Gray scale chart
   To be used for adjustment of the camera system.

10. White balance chart
    To be used for adjustment of the camera system. (for white balance adjustment)

11. INF lens holder
    To be used together with the camera stand (13) for operating the VideoMovie in the stripped-down condition such as the status without the exterior parts or for using commodities that are not yet conformable to the interchangeable ring.

12. Light box
    To be used for adjustment of the camera system.

13. Camera stand
    To be used together with the INF adjustment lens holder (11).

14. Error rate jig
    To be used to know an error correction rate from measurement results of a frequency counter at specified test points. The lower the observed error correction rate is, the less the number of errors to correct is (in other words, a low error correction rate represents the high performance of the test unit). (The followings are considered as important factors to raise the error correction rate; those are "poor or abnormal contact between tape and head", "poor interchangeability or compatibility", "defect or maladjustment of magnetic conversion parts [defective IC, maladjustment, etc.]" and so on.)

15. Soldering kit
    Thin head is made so that it can be inserted into small spaces.

16. Cleaning cloth
    Recommended cleaning cloth to wipe down the video heads, mechanism (tape transport system), optical lens surface and screen of the LCD monitor.

17. PC cable
    To be used to connect the VideoMovie and a personal computer with each other when a personal computer is used for adjustment.

18. JIG connector cable
    Connect this cable to CN116 of the MAIN-1 board for measuring error rates, etc. with the error rate measuring instrument.

1.3 DISASSEMBLY/ASSEMBLY OF CABINET PARTS

1.3.1 Disassembly flow chart

The following flowchart shows the procedure to disassemble the exterior parts. When reassembling the exterior parts, follow this flowchart in the reverse order.

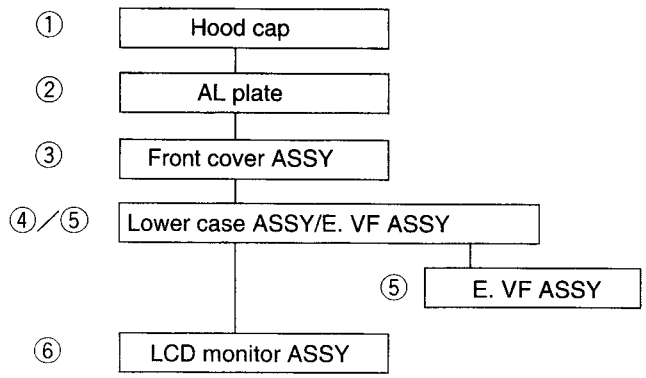

1.3.2 Disassembly method

Note: *Numbers in circles indicate the order to dismantle the exterior parts.*
Numbers of screws indicate the order to remove them, while symbols in parentheses show the types of the

STEP /LOC NO.	PART	Fig. No.	REMOVAL *UNLOCK/RELEASE/ UNPLUG/UNCLAMP/ UNSOLDER	REMOVAL Note
①	HOOD CAP	C1	–	Note 1,2
②	AL PLATE	C1	2(L1)	Note 1,2
③	FRONT COVER ASSEMBLY	C2	2(S1), (S2), (S3), (S4), 2(S5) * GRIP BELT * CAP (MICROPHONE) * CONNECTOR Ⓐ, Ⓑ	Note 3,4,5,6,7
④/⑤	LOWER CASE ASSEMBLY (INCL. E. VF ASSEMBLY)	C3-1	(S6), (S7), (S2), (S8) 2(S3), (L2), (L3), (L4) *CONNECTOR Ⓒ, Ⓓ, Ⓔ	Note 8,9,10
⑤	E. VF ASSEMBLY	C3-2	(S9), (S10), (S11) *WASHER *BACK PLATE ASSEMBLY	Note 11,12
		C3-3	2(S12), (S13) (L6), 2(L7), 2(L8) *PLATE	Note 13, 14,15
⑥	LCD MONITOR ASSEMBLY	C4-1	2(S14), 2(S15), (L9) *CONNECTOR Ⓕ *PROTECTION SHEET	Note 16
		C4-2	2(S16), 3(S17), (S18) (L9), (L10), (L11) (L12), (L13), (L14) (L15), 2(L16), (L17) (L18), (L19), (L20)	Note 17,18 19,20, 21,22
		C4-3	–	–

① **Hood cap**
Remove the hood cap while turning it.
② **AL plate**
Remove the AL plate while drawing it out.

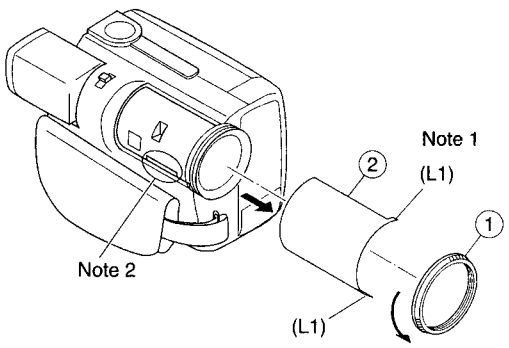

Note 1: Be careful not to damage/scratch the exterior parts. (Particularly in reassembling)
Note 2: Be careful not to break the FPC when reassembling.

Fig. C1

③ **Front cover assembly**
Pull the grip belt out of the hook.
Remove five screws (1 to 5) and fold out the LCD monitor assembly first, then remove two screws (6 and 7) and draw the front cover assembly frontwards to disconnect two connectors (Ⓐ and Ⓑ). Lastly, remove the front cover assembly from the body.

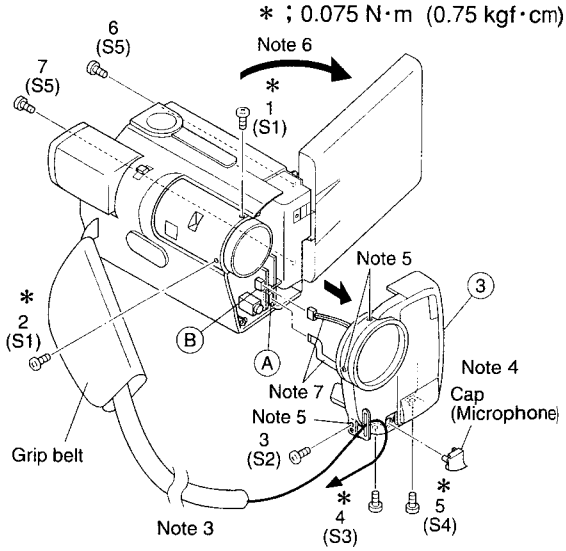

Note 3: Draw out the grip belt prior to other steps.
Note 4: Remove the cap (microphone).
Note 5: Remove silver screws (1, 2) aligned with the screw (3) in the straight line. Remove the upper one of the screw (3).
Don't reuse the screws (1, 2), because screw lock bond was applied to them.
Note 6: Fold out the LCD monitor to remove the screws. After removing the screws, fold up the LCD monitor again.
Note 7: When reassembling, insert the FPC in a gap between the microphone jack and the DC/DC board assembly. At that time, be careful not to sandwich the microphone wire between them.

Fig. C2

④ **Lower case assembly/ ⑤ E. VF assembly**

Remove six screws (8 to 13) and extend the upper side to unhook it from pawls. Then, detach the lower side while shifting it off, and disconnect three connectors (Ⓒ, Ⓓ, Ⓔ)

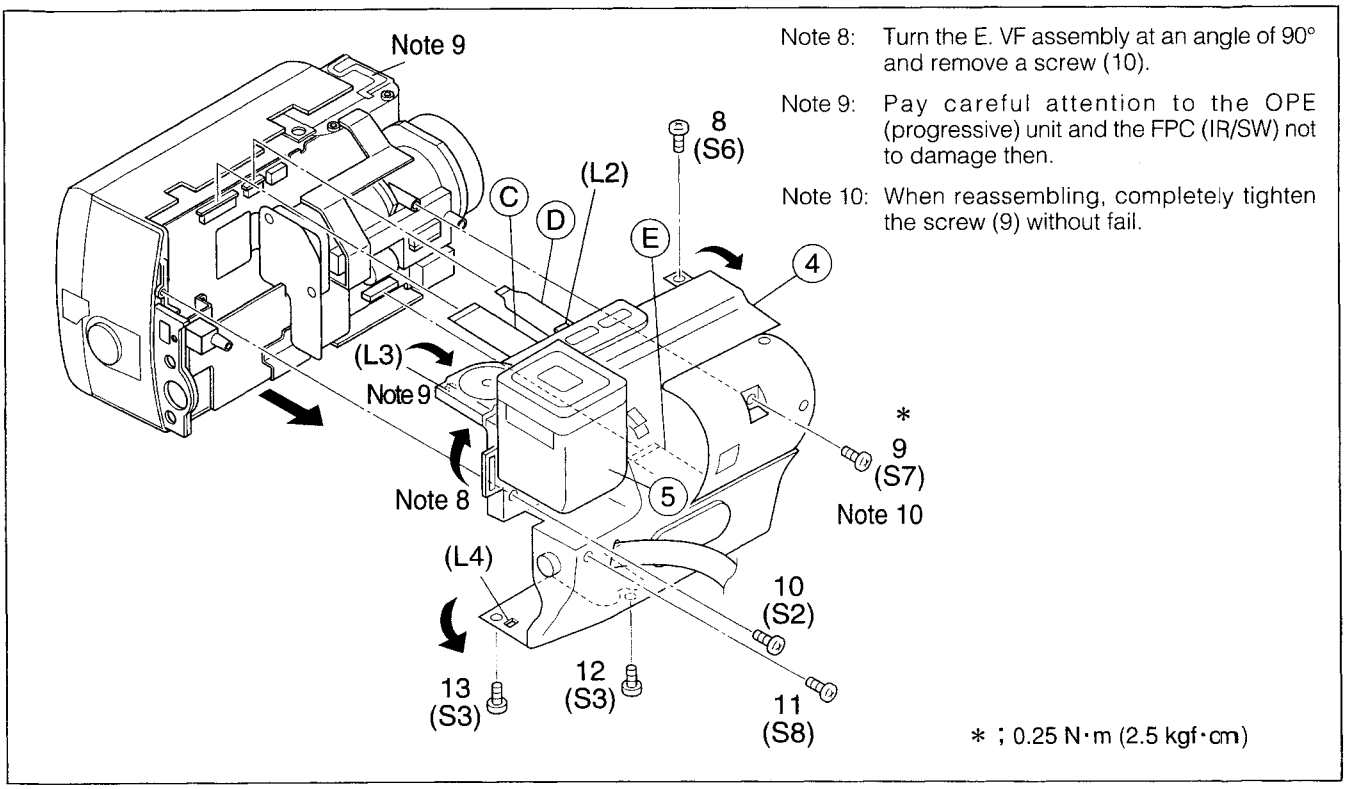

Fig. C3-1

⑤ **E. VF assembly**

Remove two screws (14, 15) and detach the back plate assembly first. Then, remove a screw (16) and detach the E. VF assembly from the lower case assembly.

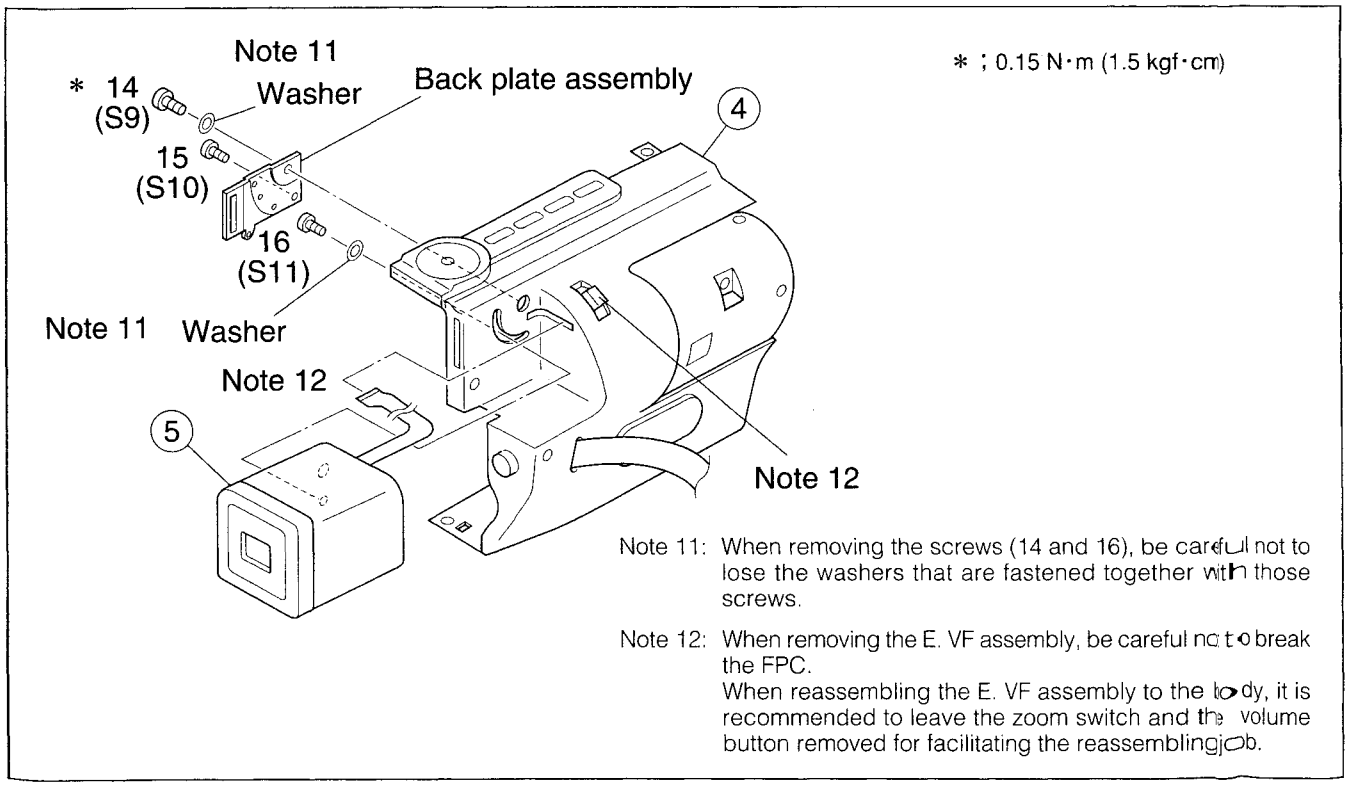

Fig. C3-2

⑤ E. VF assembly

Remove three screws (17 to 19) and draw the E. VF assembly slightly outwards. In this state, insert a sharp-pointed thing (like tweezers) into the lower gap (between the screws 17 and 18) to unhook L5, and then draw out the E. VF assembly.
Unhook L6 from the inside and remove the bottom case. Then, draw the VF board assembly out of the upper case.

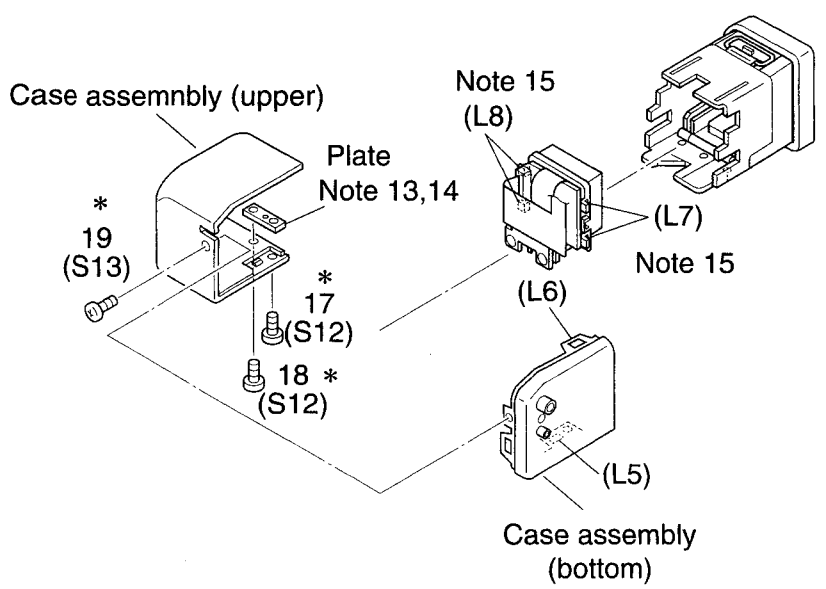

* ; 0.08 N·m (0.8 kgf·cm)

Note 13: When the screws (17, 18) are removed, the tapped plate comes off the upper case assembly. (Pay heed to it not to lose.)

When rescrewing the screws (17, 18) for reassembling, set the tapped plate with its burred side down. When tightening the screws, be careful not to stick them from the plate surface.

Note 14: Tighten those screws with the fastening torque of 0.8 kgf/cm.

Note 15: When reassembling, carefully engage the hooks L7 and L8 with the internal dents of both the upper and bottom case assemblies. Check their respective engagements by opening the eyecup.

Fig. C3-3

⑥ LCD monitor assembly

Remove two screws (20, 21) for removing the protection sheet, and then disconnect the connector (F).
Remove two screws (22, 23) and unhook L9. Then, the LCD monitor assembly can be removed.

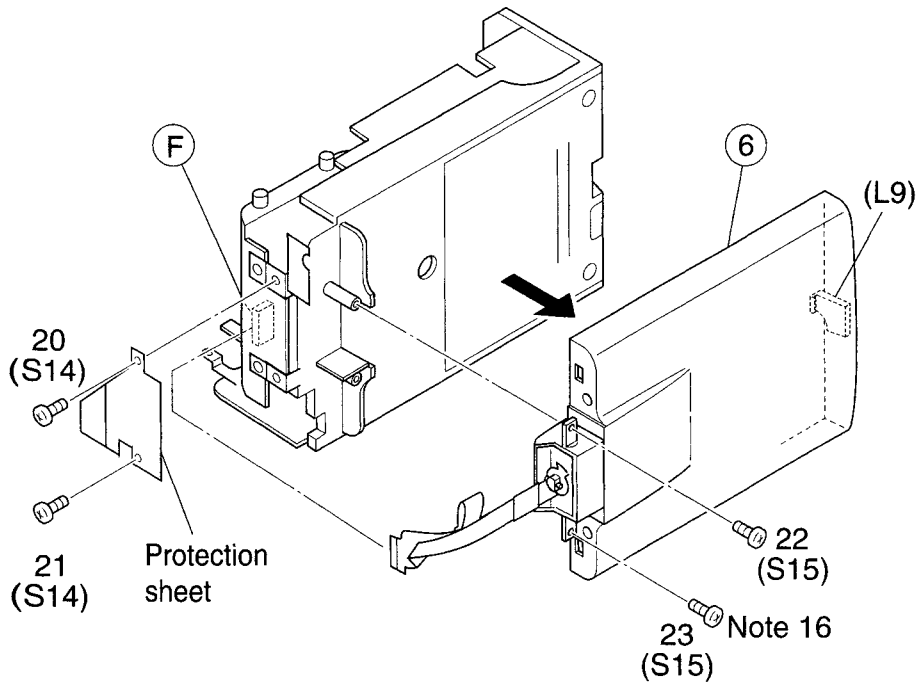

Note 16: Don't reuse the screws (22, 23), because screw lock bond was applied to them.

Fig. C4-1

⑥ LCD monitor assembly/Hinge assembly

Remove five screws (24 to 28) and disengage pawls one after another starting with the one (L10) of L9 side. Then, detach the LCD monitor cover.
Disconnect two connectors (G, H) and remove the hinge assembly.
After disconnecting two connectors (J, K), remove the board assembly, backlight and LCD module in this order. After removing the protection sheet, remove a screw (29) and unhook two pawls (L17, L18) on both sides. Then, detach the hinge cover (1) while disengaging it from hooks (L19, L20).
Detach the hinge cover (2) from the hinge, and then draw the device out of the dent part.

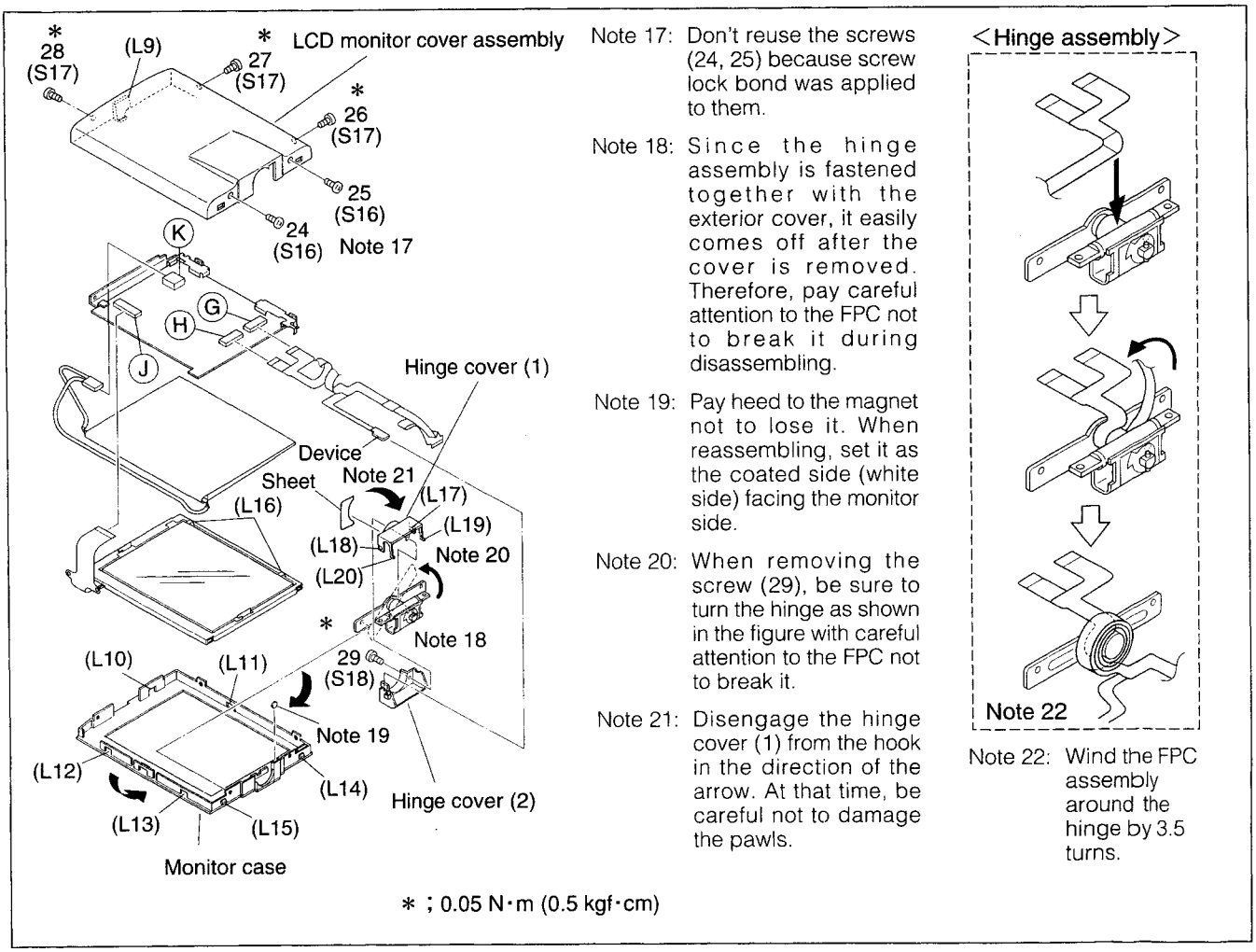

Note 17: Don't reuse the screws (24, 25) because screw lock bond was applied to them.

Note 18: Since the hinge assembly is fastened together with the exterior cover, it easily comes off after the cover is removed. Therefore, pay careful attention to the FPC not to break it during disassembling.

Note 19: Pay heed to the magnet not to lose it. When reassembling, set it as the coated side (white side) facing the monitor side.

Note 20: When removing the screw (29), be sure to turn the hinge as shown in the figure with careful attention to the FPC not to break it.

Note 21: Disengage the hinge cover (1) from the hook in the direction of the arrow. At that time, be careful not to damage the pawls.

Note 22: Wind the FPC assembly around the hinge by 3.5 turns.

Fig. C4-2

Arrangement of wires

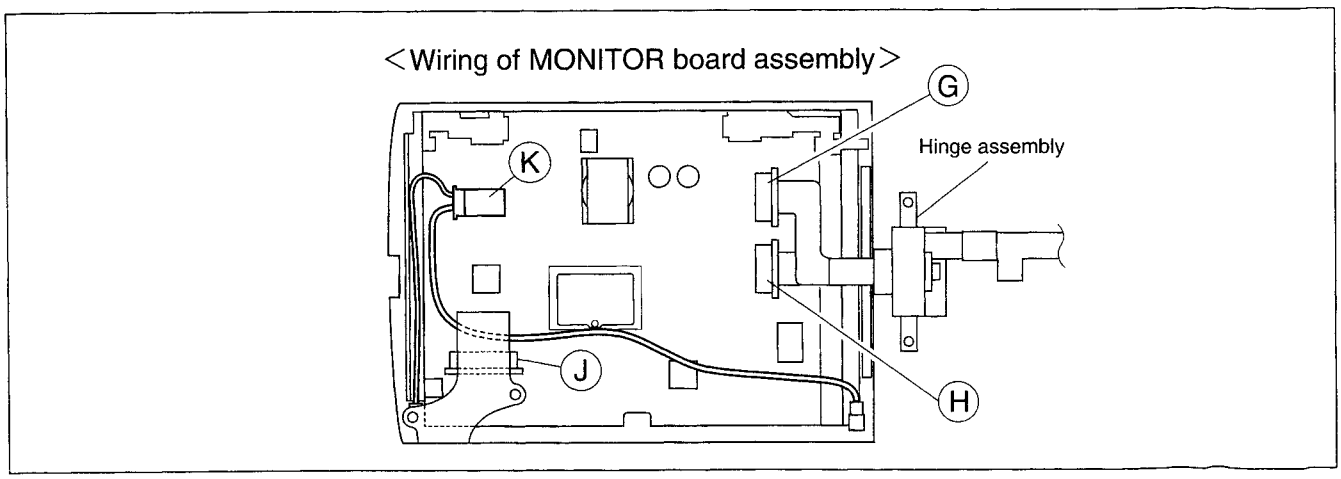

Fig. C4-3

1.4 DISASSEMBLY/ASSEMBLY OF CAMERA PARTS /DECK PARTS

1.4.1 Disassembly flow chart

The following flowchart shows the procedure to disassemble the camera block and deck block. When reassembling the camera and deck blocks, follow this flowchart in the reverse order.

Note: *Since the deck block is located under the camera block, it is required to remove the camera block prior to the deck block.*

< Camera Section>

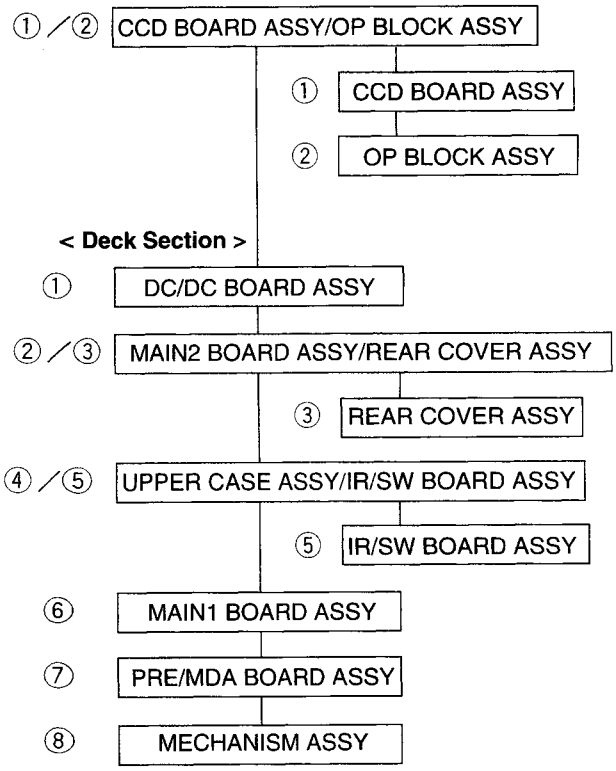

1.4.2 Disassembly method

< Camera Section >

Note: *Numbers in circles indicate the order to remove parts. Numbers of screws indicate the order to remove them, while symbols in parentheses show the types of the*

STEP /LOC NO.	PART	Fig. No.	REMOVAL	
			*UNLOCK/RELEASE/ UNPLUG/UNCLAMP/ UNSOLDER	Note
①/②	CCD BOARD ASSEMBLY /OP BLOCK ASSEMBLY	CA1	(S19), 2(S20), (L1) *CONNECTOR Ⓛ, Ⓜ	Note 1
		CA2	2(S21), 3(S7) *BRACKET (OP)	Note 2

< Camera Section>

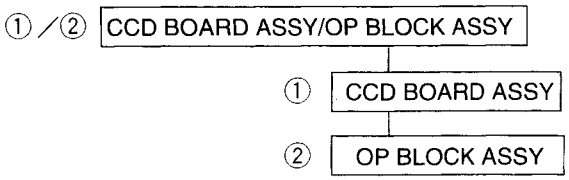

① CCD board assembly/ ② OP block assembly

Disconnect two connectors (Ⓛ, Ⓜ) and remove three screws (1 to 3), and then remove the CCD board assembly and OP block.

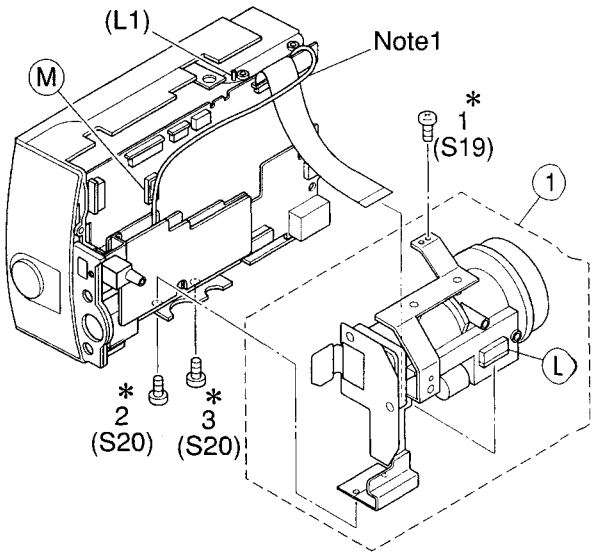

* ; 0.075 N·m (0.75 kgf·cm)

Note 1: Arrange the wire (battery terminal) as shown in the figure so that it does not disturb reassembling of the OP block.

Fig. CA1

① **CCD board assembly**
Remove two screws (4, 5) to remove the CCD board assembly.

② **OP block assembly**
2 OP block assembly
Remove three screws (6, 7, 8) and the bracket (OP). Then, the OP block assembly can be removed.

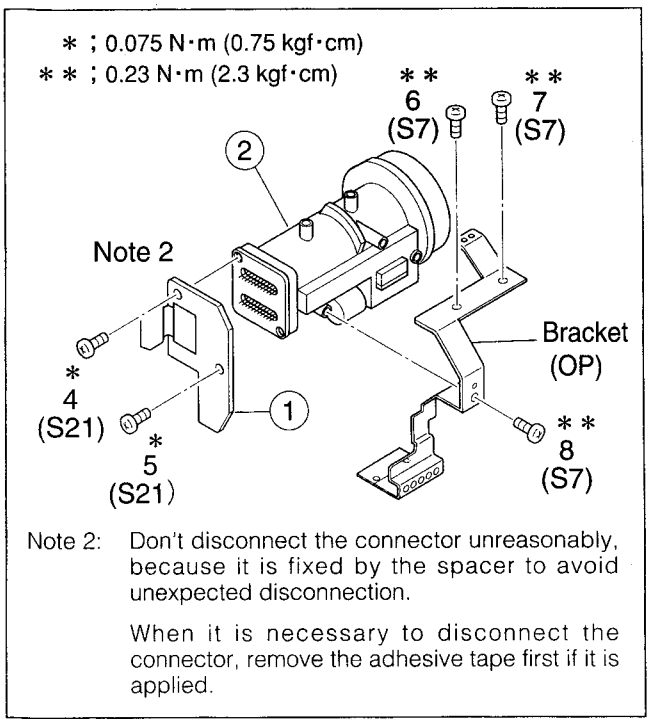

Note 2: Don't disconnect the connector unreasonably, because it is fixed by the spacer to avoid unexpected disconnection.

When it is necessary to disconnect the connector, remove the adhesive tape first if it is applied.

Fig. CA2

< Deck Section>

Note: *Numbers in circles indicate the order to remove parts. Numbers of screws indicate the order to remove them, while symbols in parentheses show the types of the screws.*

STEP /LOC NO.	PART	Fig. No.	REMOVAL *UNLOCK/RELEASE/ UNPLUG/UNCLAMP/ UNSOLDER	REMOVAL Note
①	DC/DC BOARD ASSEMBLY	D1	*CONNECTOR Ⓝ	–
②/③	MAIN2 BOARD ASSEMBLY /REAR COVER ASSEMBLY	D2	(S19), (S22), (S23), (S6), (L1) *CONNECTOR Ⓞ,Ⓟ,Ⓠ JACK COVER	Note 1,2,3
	REAR COVER ASSEMNBLY	D3	(S23)	Note 4
④/⑤	UPPER CASE ASSEMBLY	D4-1	3(S24), (L2), (L3) *CONNECTOR Ⓡ, Ⓢ	Note 5,6,7
	IR/SW BOARD ASSEMBLY	D4-2	2(S25)	Note 8
⑥	MAIN1 BOARD ASSEMBLY	D5	(S26), (L2), (L3) *BRACKET (PWB) *CONNECTOR Ⓣ,Ⓤ,Ⓥ,Ⓦ	–
⑦	PRE/MDA BOARD ASSEMBLY	D6	2(S27), (L4), (L5) *SHIELD CASE (PRE) *CONNECTOR Ⓧ,Ⓨ,Ⓩ	Note 9
⑧	MECHANISM ASSEMBLY	D7	2(S27), (S28) *BRACKET 1 *BRACKET 2/SHEET	Note 10

<Deck Section >

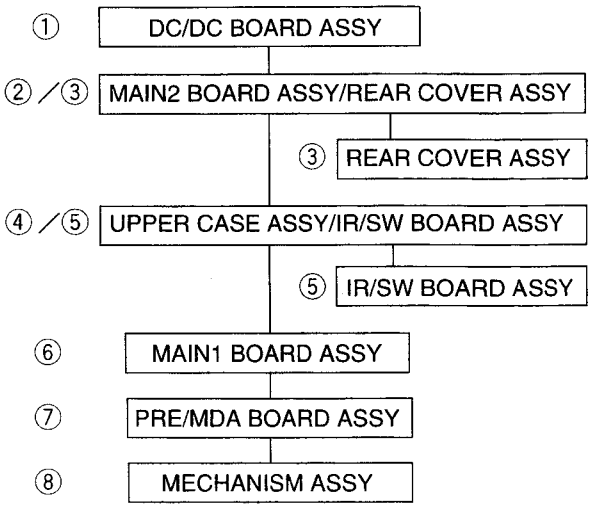

① **DC/DC board assembly**
Disconnect the connector (Ⓝ) and then remove the DC/DC board assembly.

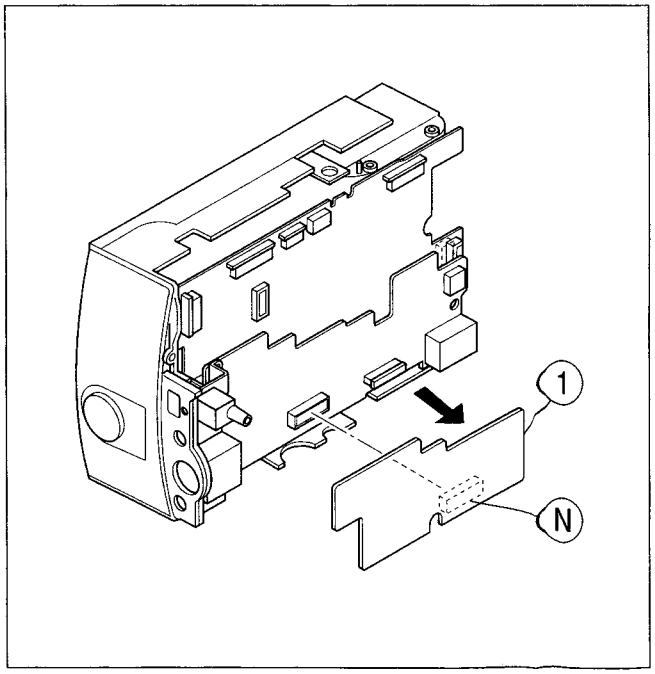

Fig. D1

② **MAIN-2 board assembly/③ Rear cover assembly**

Disconnect the connector (Ⓞ) first to prevent the FPC from getting damaged. After removing a screw (1), draw out the battery terminal. Next, remove three screws (2 to 4) and disconnect two connectors (Ⓟ, Ⓠ). Then, the MAIN-2 board assembly can be removed together with the rear cover assembly.

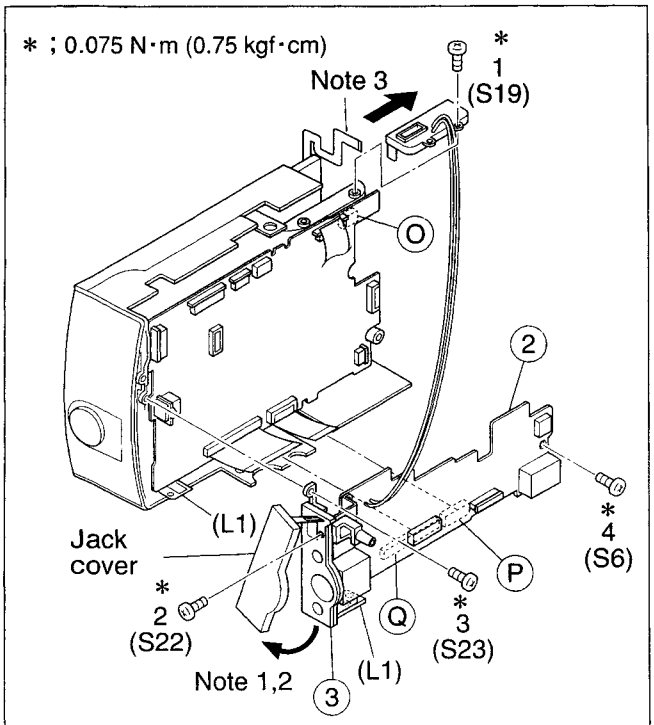

Note 1: Open the jack cover.

Note 2: Remove the jack together with the rear cover.

Note 3: Pay heed to the FPC not to break it.

Fig. D2

③ **Rear cover assembly**

Remove a screw (5) to detach the rear cover assembly.

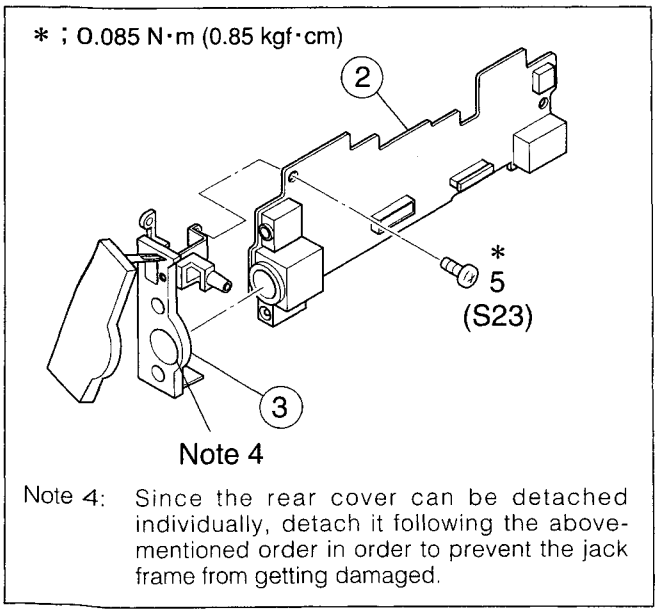

Note 4: Since the rear cover can be detached individually, detach it following the above-mentioned order in order to prevent the jack frame from getting damaged.

Fig.D3

④ **Upper case assembly**

Remove three screws (6, 7, 8) and disconnect two connectors (Ⓡ, Ⓢ) to detach the upper case assembly.

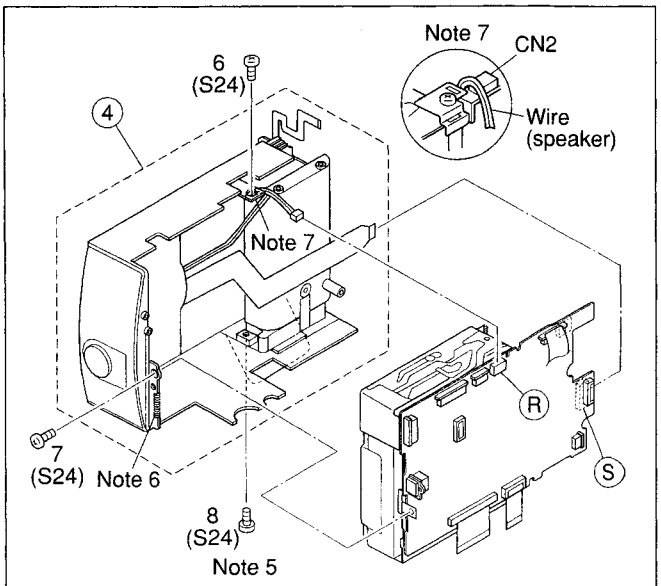

Note 5: Open the battery cover and remove a screw (8).

Note 6: While leaving the cassette cover open, gradually detach the upper case assembly. (When detaching, pay heed to the cassette side because it is easily caught by other parts.) When detaching the upper case assembly, be careful not to lose the spring.

Note 7: When reassembling, carefully arrange the wire (for speaker) so that it passes over the top of CN2 as shown in the figure.

Fig. D4-1

⑤ **IR/SW board assembly**

Remove a screw (9) first, and then detach the IR board assembly.

Next, remove a screw (10) and detach the SW board assembly.

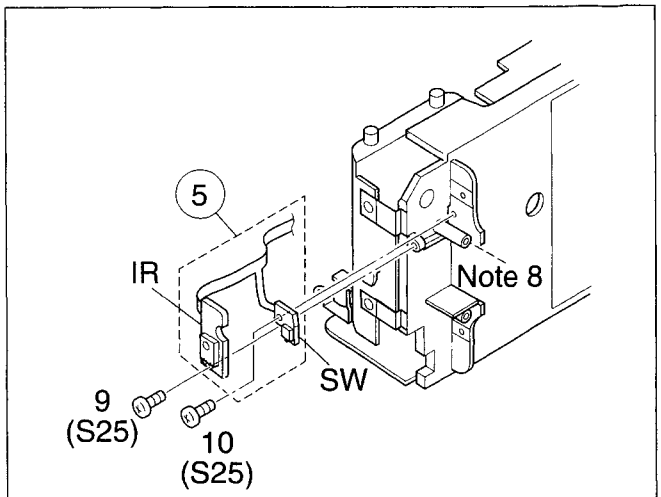

Note 8: When reassembling the SW board, set the tip of its switch block at the edge of the exterior cover.

Fig.D4-2

⑥ **MAIN1 board assembly**

Remove a screw (11) and detach the bracket (PWB). Then, disconnect two connectors (T, U).
Unlatch L2 and L3 and disconnect a connector (V). Next, disconnect a connector (W), and the MAIN1 board assembly can be removed.

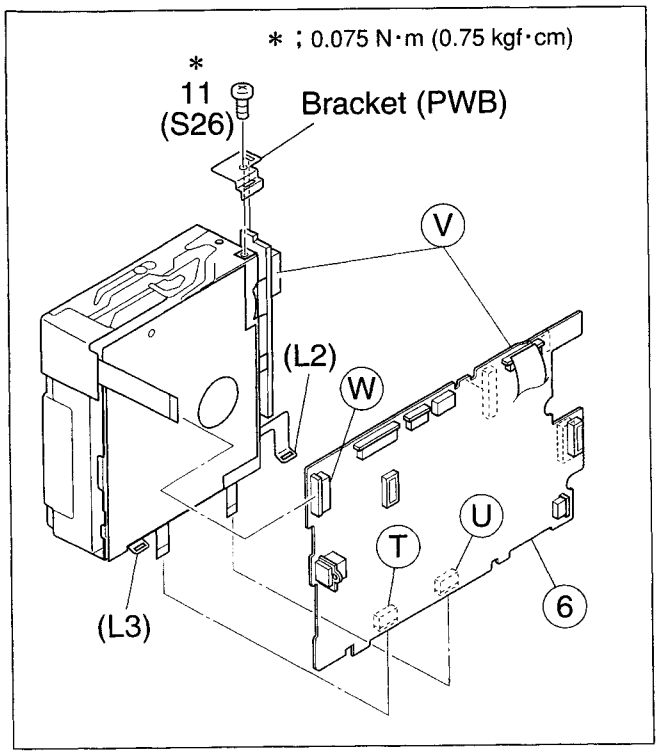

Fig. D5

⑦ **PRE/MDA board assembly**

Disconnect a connector (X) and remove two screws (12, 13). Next, unlatch L4 and detach the PRE/MDA board assembly from the board bracket. In this state, disconnect two connectors (Ⓨ, Ⓩ) to remove the PRE/MDA board assembly.

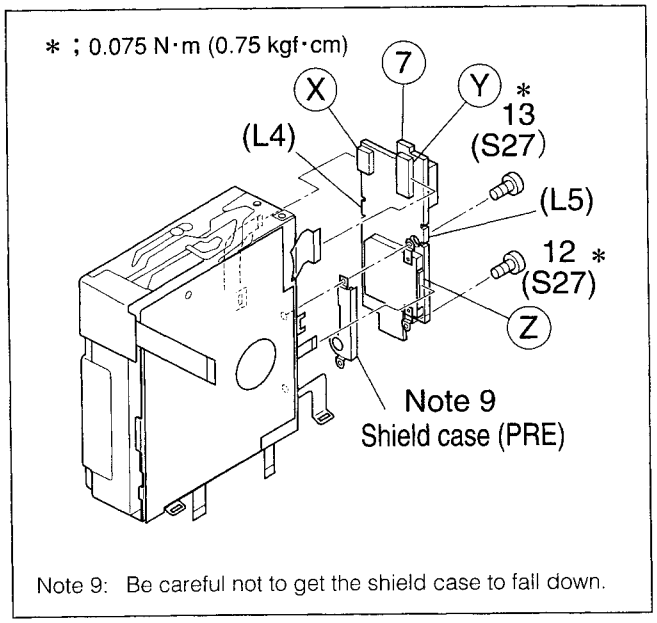

Fig. D6

⑧ **MECHANISM assembly**

Remove two screws (14, 15) and remove the bracket 1. Next, remove a screw (16) and remove the bracket 2 with the sheet.

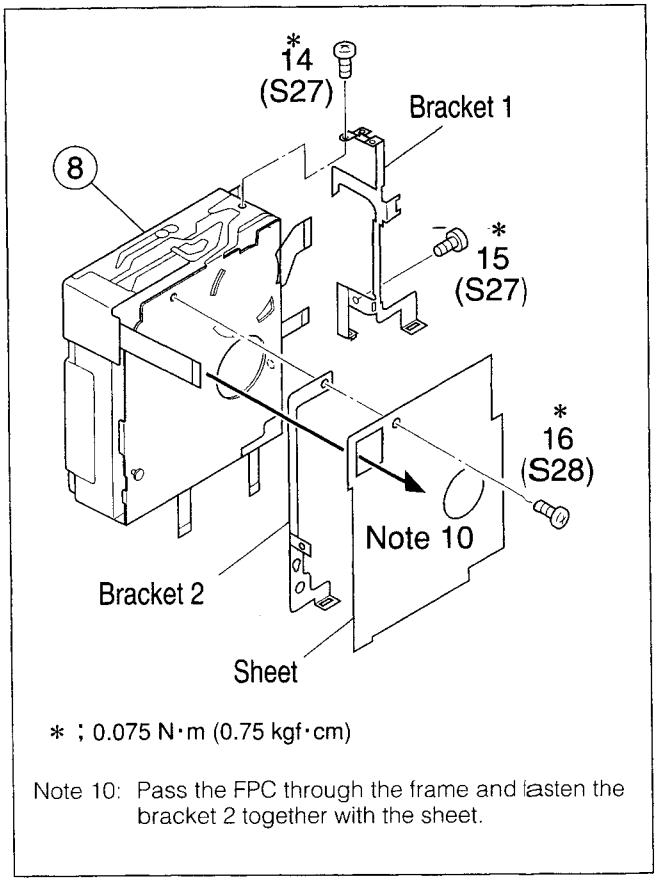

Fig. D7

1.5 DISASSEMBLY/ASSEMBLY OF OP BLOCK

1.5.1 Replacement of CCD image sensor

Note:
- *Pay the most careful attention to the transparent glass, optical filter and master lens of the CCD image sensor not to get them soiled, dusty or damaged.*
  If some of them gets dirty with fingerprints, etc. wipe it out with the super cleaning cloth, silicone paper or clean chamois, etc.
- *The CCD image sensor is occasionally shipped from the factory as an orange-colored protection seal is applied onto its transparent glass. If so, leave the protection seal as it is and remove it just before setting the new CCD image sensor in the OP block for replacement.*

1.5.2 How to remove CCD image sensor

1. Remove the two screws Ⓐ fastening the CCD base first, and then remove the section enclosed by a broken-line in the figure from the OP block assembly.
   At that time, pay heed to the optical low-pass filter, spacer rubber, etc. not to drop them.

1.5.3 How to reassemble CCD image sensor to OP block

1. Remove the protection seal from the CCD image sensor. Lay the optical low-pass filter on the spacer rubber, and set them on the OP block as they are stacked in the above-mentioned order. When setting those parts, follow the directions of the table below.

Part name	Setting orientation
CCD image sensor	Orientate the marking in the direction of the arrow ⓐ.
Spacer rubber	Orientate the flat side towards the CCD side.
Optical low-pass filter	Orientate the marking in the direction of the arrow ⓐ and the OP block side.

2. Set the new CCD image sensor on the OP block so that the marking of the image sensor orientates in the direction of the arrow ⓐ.
3. Fasten the CCD image sensor together with the CCD base with two screws Ⓐ.

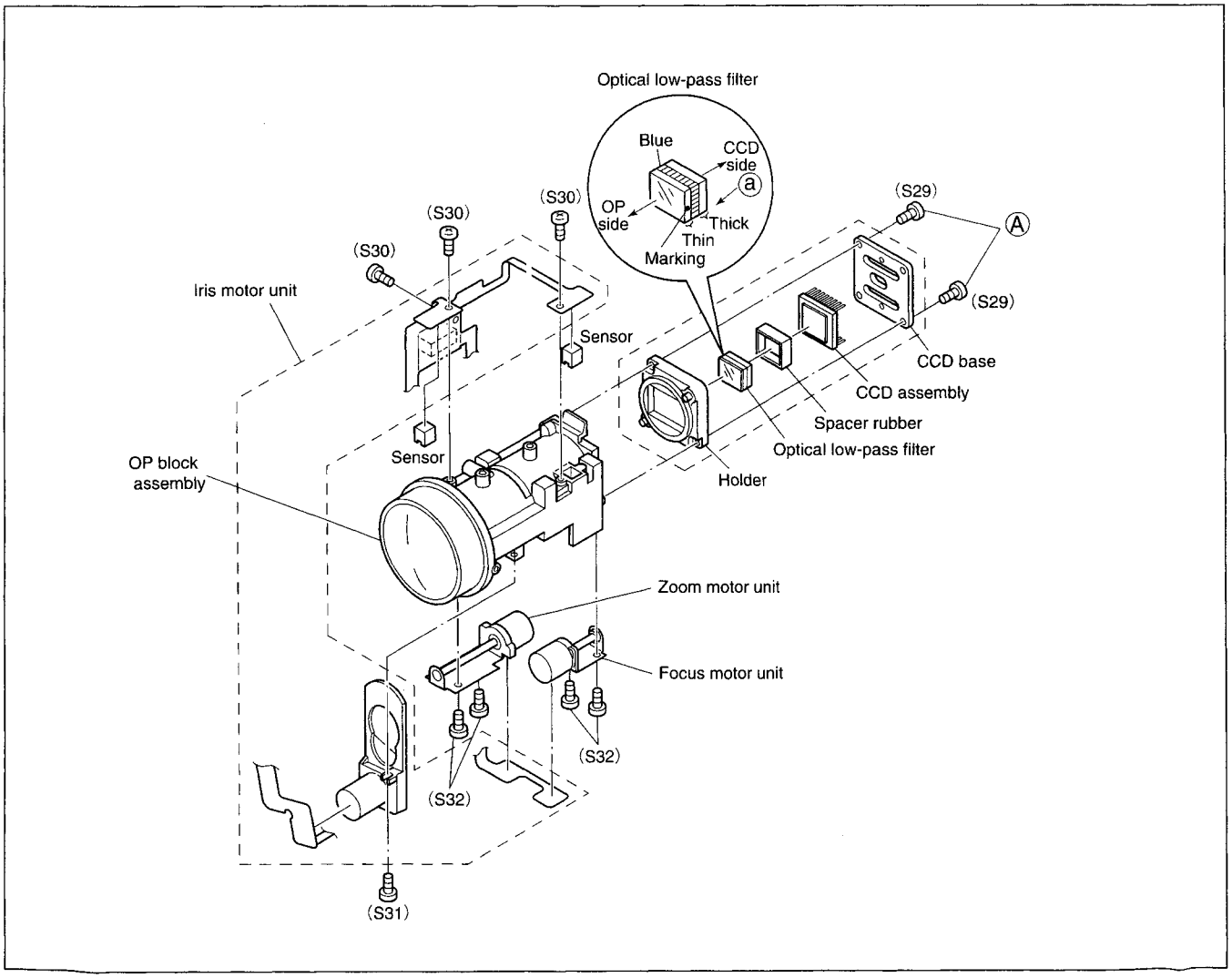

Fig. 5-1

LIST <DISASSEMBLY>

; Connector of removed component during disassembly

Order	Connector	Connected Point					Number Of Pins	Class	Patch Cord
1	A	MAIN1	CN123	←→	LENS SHUTTER	-	8	FPC	
2	B	MAIN2	CN204	←→	MIC	-	3	WIRE	-
3	C	MAIN1	CN112	←→	VF	CN7301	22	FPC	YTU94074-22,YTU94077-22
4	D	MAIN1	CN109	←→	OPE(DECK)	-	8	FPC	YTU94074-8,YTU94077-8
5	E	MAIN2	CN207	←→	MULTI_PIN	-	28	FPC	
6	F	MAIN1	CN113	←→	LCD	CN741,CN742	39	FPC	
7	G	LCD	CN741	←→	MAIN1	CN113	16	FPC	
8	H	LCD	CN742	←→	MAIN1	CN113	16	FPC	
9	J	LCD	CN743	←→	LCD	-	24	FPC	
10	K	LCD	CN7501	←→	BACK LIGHT	-	2	WIRE	
11	L	OP BLOCK	-	←→	MAIN1	CN122	22	FPC	YTU94074-22,YTU94077-22
12	M	CCD	CN502	←→	MAIN1	CN121	40	B to B	YTU93090A
13	N	MAIN2	CN205	←→	DC/DC CONV	CN601	50	B to B	PEMCJ1202-050
14	O	MAIN1	CN107	←→	IR/SW	-	8	FPC	YTU94074-8,YTU94077-8
15	P	MAIN1	CN102	←→	MAIN2	CN201	45	FPC	
16	Q	MAIN1	CN103	←→	MAIN2	CN202	50	FPC	
17	R	MAIN1	CN110	←→	SPEAKER	-	2	WIRE	-
18	S	MAIN1	CN108	←→	OPE(CAMERA)	-	15	FPC	YTU94074-15,YTU94077-15
19	T	MAIN1	CN105	←→	MECHA	-	8	FPC	YTU94074-8,YTU94077-8
20	U	MAIN1	CN104	←→	LOADING MOTOR	-	6	FPC	YTU94074-6,YTU94077-6
21	V	MAIN1	CN101	←→	PRE/REC_MDA	CN2	60	B to B	YTU94114A-60
22	W	MAIN1	CN106	←→	MECHA	-	15	FPC	YTU94074-15,YTU94077-15
23	X	PRE/REC_MDA	CN3	←→	DRUM MOTOR	-	11	FPC	YTU94074-11,YTU94077-11
24	Y	PRE/REC_MDA	CN4	←→	CAPSTAN MOTOR	-	18	FPC	
25	Z	PRE/REC_MDA	CN1	←→	HEAD	-	8	FPC	
-	-	MAIN1	CN116	←→	JIG CONN	-	20	—	YTU93091A

Table 6-1

1.6.2 Connection of Connectors (PATCH CORDS)

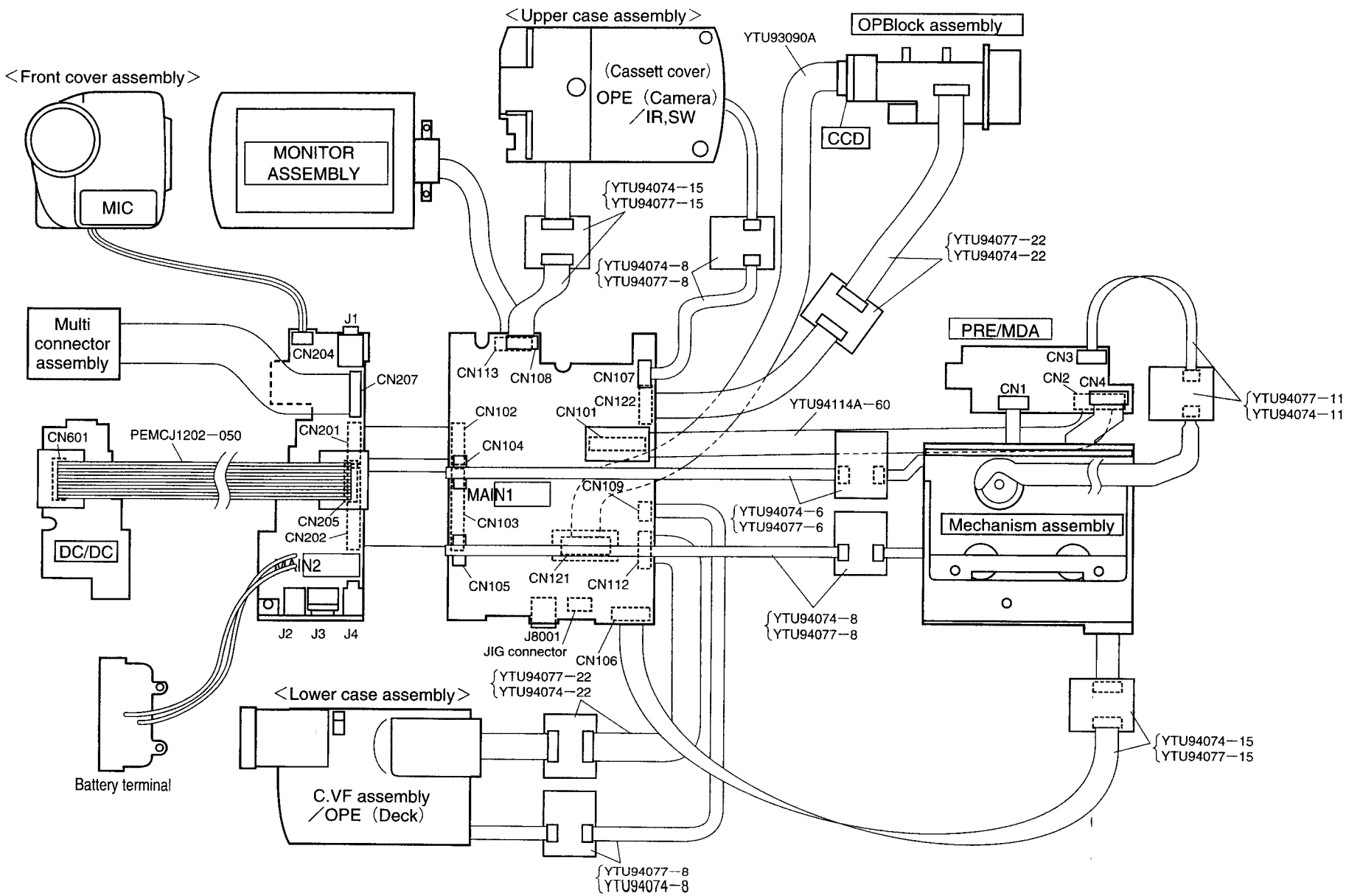

Fig.7-1

1.7 HOW TO TAKE OUT TAPE

In the event that the cassette tape cannot be ejected when it is loaded in the mechanism, take it out according to the following procedure. However, keep it in mind that this procedure is an emergency measure to the end and it can be applied to the case that the tape cannot be ejected not by a mechanism failure such as out of phase, etc. but by an electrical failure.
From viewpoints of the workability and reliability, it is recommended to take out the tape after removing all exterior parts.

1. Disconnect the power source (battery, DC cord) from the set.
2. Fold out the LCD monitor.
3. Slide the door lock button and open the cover completely to its full open position.
4. While supplying 3 V DC to the electrodes on the top of the motor, stop both the pole bases as they are in the unloading status inside the tape. At that time, pay heed to the pole bases and the tape not to get them soiled with grease, etc. because the tape is remained inside.
   (Refer to the magnified view "A" in Fig. 8-1.)
   Continue the unloading status of both the pole bases even after they have been positioned inside the tape. Therefore, the pole bases finally reach the eject position and the cassette housing is accordingly lifted up so as to catch the tape between the front lid and back lid. Carefully avoid this operation because it may cause damage on the tape.
5. When the tape is slack, take in the slack of it by turning the center gear assembly with a sharp-pointed thing (such as the chip IC replacing jig, etc.) in the direction of the arrow with care not to get the tape damaged.
   (Refer to the magnified view "B" in Fig. 8-1.)
   If the tape cannot be wound up by turning the center gear assembly, it comes from the reason that the swing arm assembly is in the neutral position and no driving force is not transmitted to the reel disc. In such the event, change the mechanism mode and fine adjust the tape status.
   When the tape is completely wound up, continue the unloading mode until the mechanism reaches the eject position, and then take out the tape.
   After taking the tape out of the mechanism, check to see if the tape is soiled with grease, etc. or not.

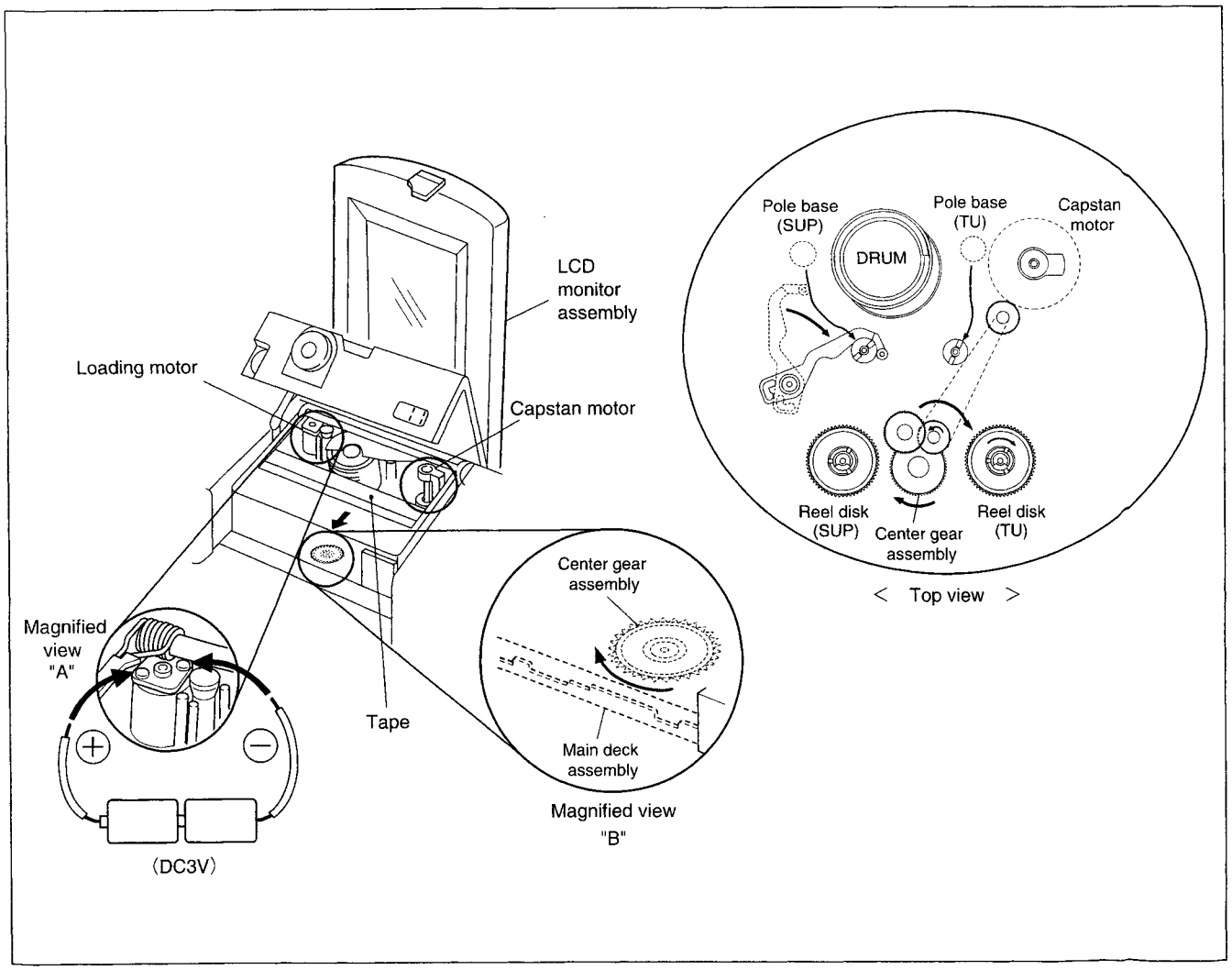

Fig. 8-1

Screw Managment Table

<Cabinet Parts>

	①	②	③							④/⑤						⑤		
	—	—	1	2	3	4	5	6	7	8	9	10	11	12	13	14	15	16
Paste Here →	—	—	*	*														
Fig No. →	C1	C1	C2							C3−1						C3−2		
NOTE →			・Grip Belt/Cap(Mic)													・Plate/Washer		
NOTE →			* ; Lock Screw															

	⑤			⑥									
	17	18	19	20	21	22	23	24	25	26	27	28	29
Paste Here →						*	*	*	*				
Fig No. →	C3−3			C4−1				C4−2					
NOTE →	・Plate			・Protect Sheet				・Sheet					
NOTE →				* ; Lock Screw									

<Camera Section>

	①/②			②		①		
	1	2	3	4	5	6	7	8
Paste Here →								
Fig No. →	CA1			CA1		CA1		
NOTE →						・Bracket(OP)		

<Deck Section>

①	②/③				③	④		
–	1	2	3	4	5	6	7	8
–								
D1	D2				D3	D4−1		
	・Jack Cover							

	⑤		⑥	⑦		⑧		
	9	10	11	12	13	14	15	16
Paste Here →								
Fig No. →	D4−2		D5	D6		D7		
NOTE →			・Bracket(PWB)		・Bracket1, 2			
NOTE →				・Sealed Case			・Sheet	

<USE>

Copy this page,paste double-sided adhesive tape at the"Paste Here"area, and stick the removed screw there.

Table 9-1

PRECAUTIONS ON HANDLING THE LITHIUM SECONDARY BATTERY

This unit is equipped with a coin type lithium secondary battery.
Improper handling of this battery may cause heat to be generated, damage, fires, or leakage.
Always follow the precautions below.

① Do not short-circuit, disassemble, distort, nor heat the battery.
② Load the battery with its + and - poles connected correctly.
③ Do not solder the battery itself.
④ When replacing parts, also refer to the numbers listed in the Parts List of the manual.
⑤ Do not store the battery in direct sunlight and hot and humid places.
⑥ When replacing the battery, handle it with care and do not attempt to hold it with tweezers as it may short-circuit.
⑦ When disposing the battery, wind tape around the terminal to insulate the battery, and dispose the battery according to the method prescribed.

SECTION 2
MECHANISM ADJUSTMENT

2.1 PRELIMINARY REMARKS ON ADJUSTMENT AND REPAIR

2.1.1 Precautions

1. Carefully handle the drum assembly.
   Especially be careful not to touch the upper disc of the upper drum assembly.
2. Since torque to tighten parts of this model is specified lower than that for previous VideoMovies as mentioned below, be very careful of specified torque when tightening a screw.

   Mechanism parts in general ..... 0.04 N.m (0.4 kgf.cm)
   Cassette housing parts ..... 0.06 N.m (0.6 kgf.cm)
   (Reference) VideoMovie parts ..... 0.1 N.m (1.0 kgf.cm)

3. Be sure to disconnect the power supply from the set before reassembling parts to it or soldering parts.
4. Carefully connect/disconnect connectors not to get their wires damaged. (Refer to the Section 1.)
5. When removing parts and reassembling them to the set, be very careful neither to damage them nor to fit wrong parts to the set by mistake.

2.1.2 Notes on disassembling/reassembling procedure

Table 2-1-2-1 shows a procedure to disassemble/reassemble mechanism parts. Carefully read the following explanation before starting disassembling/reassembling actually.

① : Circled numbers appearing in Table 2-2-1 and drawings indicate order of disassembling. When reassembling, follow the numbers in the reverse order (from higher number to lower number).
Respective circled numbers correspond to those appearing in drawings.

② : This column shows part names corresponding to circled numbers.

③ : The symbol appearing in this column indicates the upper side or the lower side of the set in which the part is mounted.
T = Upper side, B = Lower side

④ : Numbers appearing in this column indicate drawing numbers.

⑤ : This column indicates screws, washers, springs and other parts to be removed/fitted for disassembling/reassembling the set. Besides indication of such parts, this column occasionally indicates working points.
P = Spring
W = Washer
S = Screw
* = Lock (L), soldering (SD), shield, connector (CN), etc.

Example
- Remove (W1) = Washer W1.
- * Remove the solder at (SD1) = Point SD1.
- * Disconnect Ⓐ = Connector Ⓐ.

⑥ : Cautions on disassembling/reassembling
(For parts that need phase adjustment after reassembling, refer to "2.2.4 Check and adjustment of mechanism phase".)

2.1.3 Screws and washers used in mechanism

Table 2-1-1 shows screws and washers used in the mechanism by their part numbers with their respective symbols and shapes.
When disassembling/reassembling the mechanism, be careful not to make any mistake in removing/refitting screws or washers.

Symbol	Shape	Parts No.
S1		YQ43893
S2		YQ43893-2
S3		YQ43893-7
S4		YQ43893-6

Symbol	Shape	Parts No.
W1		YQ44246
W2		YQ44246-2
W3		PQM30017-43
W4		YQ43933-2

Table 2-1-1

Step No.	Parts Name		Fig. No.	Point	Remarks
①	REEL COVER ASSEMBLY	T	M1	2(S1), (L1), (L2)	
②	PINCH ROLLER ARM ASSEMBLY	T	M1	(W1)	
③	SWING ARM ASSEMBLY	T	M1	(W2)	
④	RELEASE LEVER 2 ASSEMBLY	T	M2	–	
①	②	③	④	⑤	⑥

2.2 DISASSEMBLING/REASSEMBLING MECHANISM AND CASSETTE HOUSING

2.2.1 General statement

The mechanism should generally be disassembled/reassembled in the EJECT mode. (Refer to Fig. 2-2-1.)
When the mechanism is removed from the main body, however, it is set in the STOP mode. Therefore, it is required to shift the mechanism mode from the STOP to the EJECT mode after the mechanism is removed from the main body. To shift the mechanism mode to the EJECT mode, supply 3 V DC to the loading motor as same as the procedure of "1.8 HOW TO TAKE OUT TAPE" (Section 1, page 1-15).

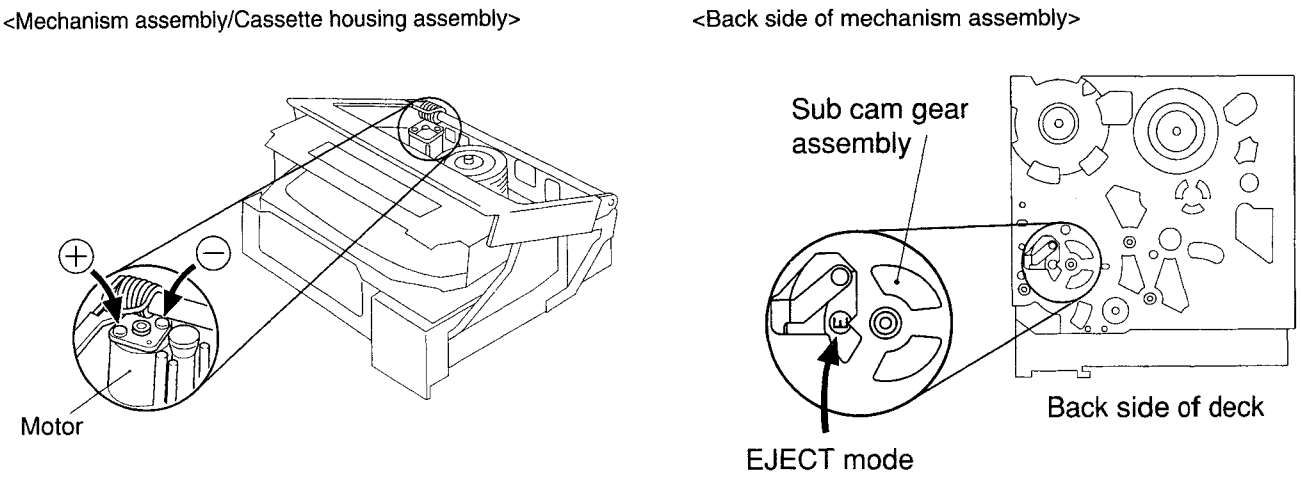

Fig. 2-2-1

2.2.2 Removing cassette housing

Note: *Before removing the cassette housing assembly from the deck, remove the brackets (1), (2), shield case and PRE/MDA board assembly without fail.*

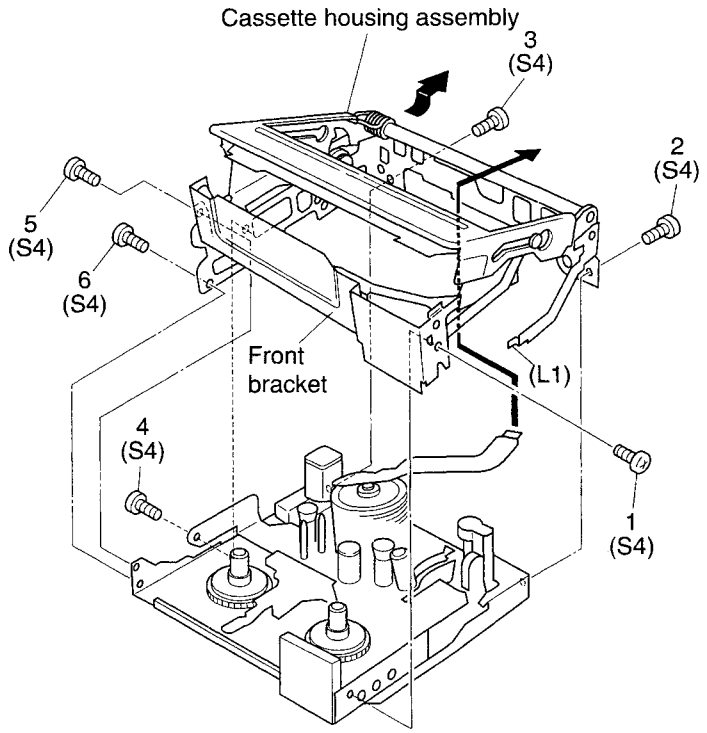

Fig. 2-2-2

1. Remove six screws (S4) in the specified order.
2. Release the front bracket from engagement by one side first and by the other side next, then, draw it out in the direction of the arrow while disengaging L1 from the front bracket. Through this work, pay careful attention to the FPC of the rotary encoder located in the left side not to break it.

2.2.3 Disassembly/assembly of mechanism section

1. Configuration

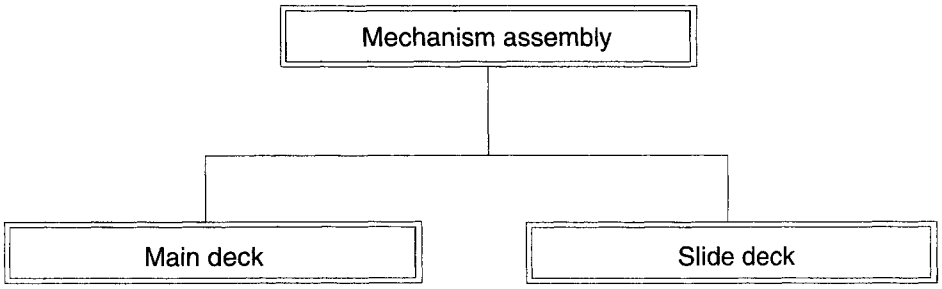

Fig. 2-2-3

2. Procedures for disassembly

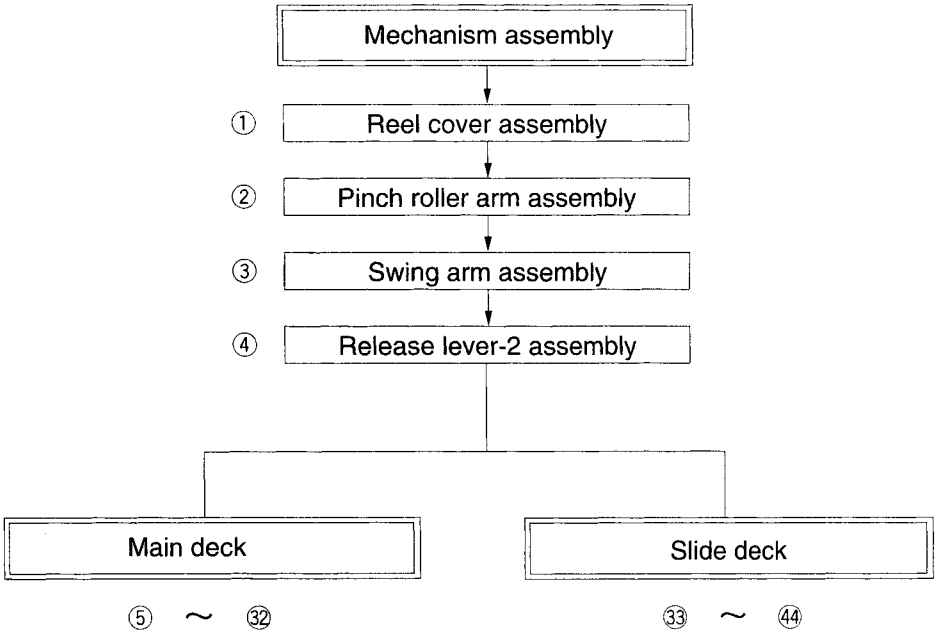

Fig. 2-2-4

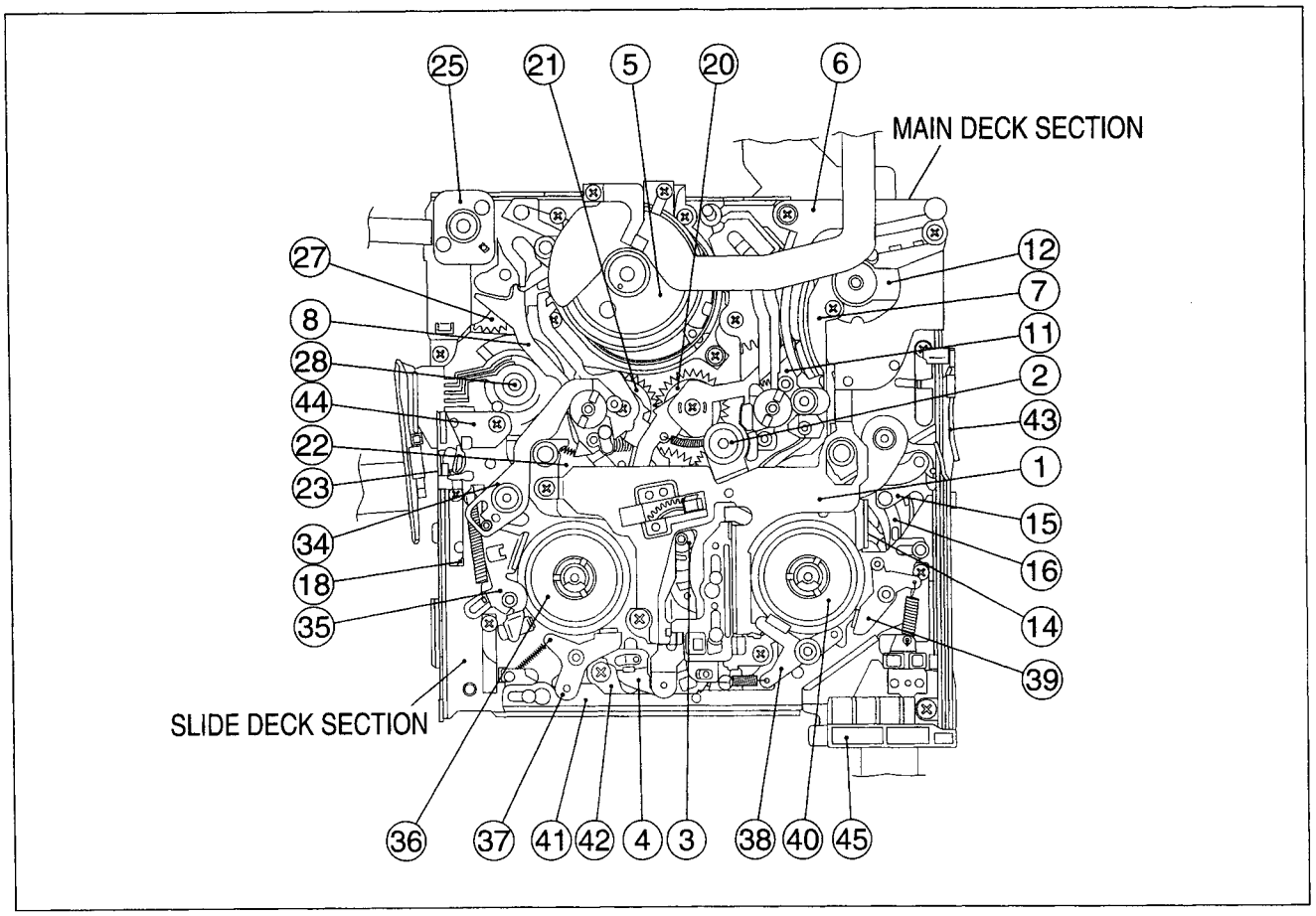

Fig. 2-2-5 TOP VIEW

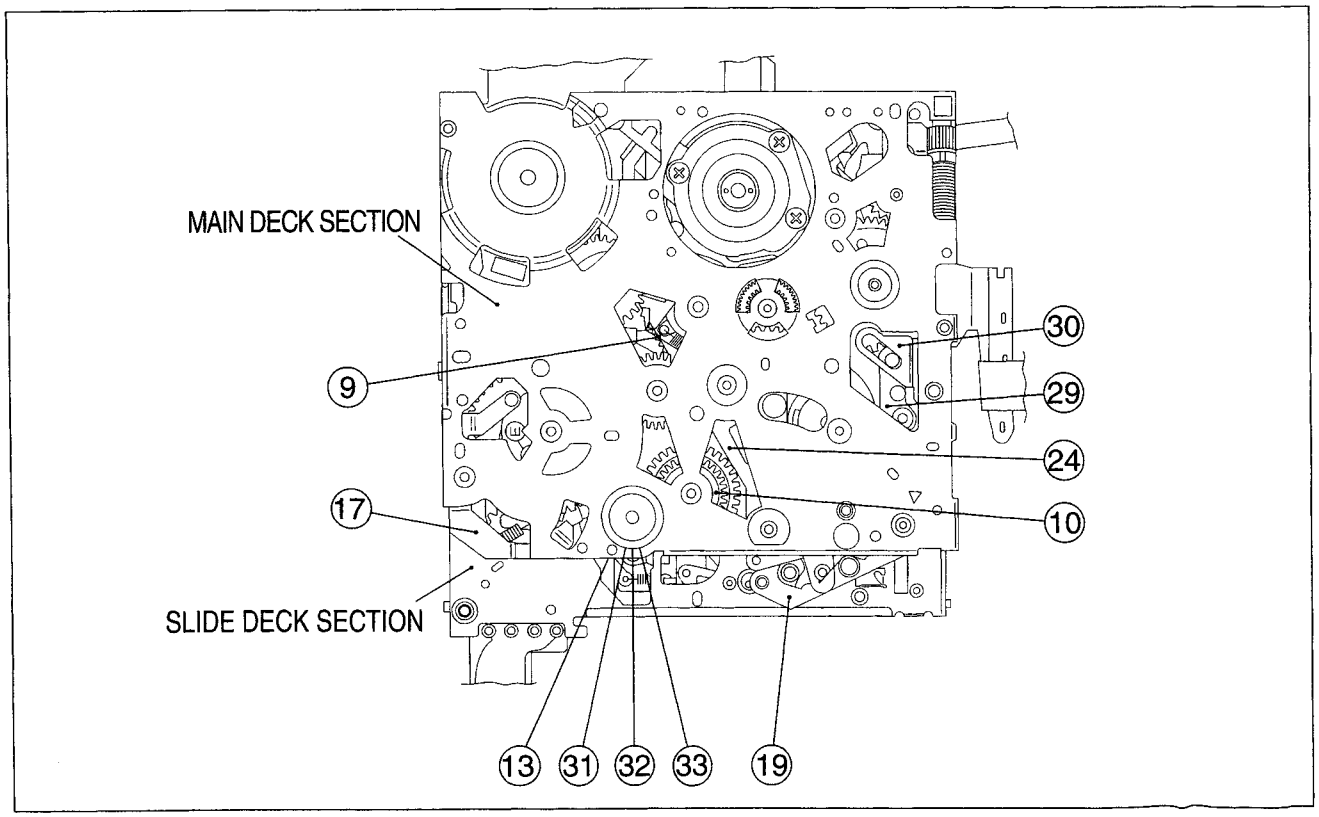

Fig. 2-2-6 BOTTOM VIEW

Step No.	Parts Name		Fig. No.	Point	Remarks
MECHANISM ASSEMBLY (MAIN DECK SECTION/SLIDE DECK SECTION)					
①	REEL COVER ASSEMBLY	T	M1	2(S1), (L1), (L2)	
②	PINCH ROLLER ARM ASSEMBLY	T	M1	(W1)	
③	SWING ARM ASSEMBLY	T	M1	(W2)	
④	RELEASE LEVER ASSEMBLY	T	M2	–	
–	SLIDE DECK SECTION	T	M2	(S2), 4(S1)	NOTE 4)
MAIN DECK SECTION					
⑤	DRUM ASSEMBLY	T	M3	3(S1)	NOTE 5)
⑥	MIDDLE CATCHER ASSEMBLY	T	M3	2(S1)	
⑦	GUIDE RAIL ASSEMBLY (TU SIDE)	T	M3	3(S1)	Phase check and adjustment
⑧	GUIDE RAIL ASSEMBLY (SUP SIDE)	T	M3	(S1), (L3)	Phase check and adjustment
⑨	TIMING BELT	T	M4	–	
⑩	CENTER GEAR ASSEMBLY	T	M4	–	
⑪	REEL DRIVE PULLEY ASSEMBLY	T	M4	(W1), (P1)	
⑫	CAPSTAN MOTOR	T	M4	(S1)	
⑬	BASE PLATE ASSEMBLY	T	M4	(S1)	NOTE 4)
⑭	BRAKE CONTROL ARM ASSEMBLY	T	M4	(W1), (P1)	Phase check and adjustment
⑯	CHARGE ARM ASSEMBLY	T	M4	(S1)	Phase check and adjustment
⑰	SUB PLATE ASSEMBLY	T	M4	–	Phase check and adjustment
⑱	TENSION ARM CONTROL PLATE ASSEMBLY	T	M5	–	Phase check and adjustment
⑲	SLIDE LEVER ASSEMBLY	T	M5	–	Phase check and adjustment
⑳	CONNECT GEAR 2	T	M5	(S1)	
㉑	CONNECT GEAR	T	M5	(S1)	
㉒	MAIN CAM (1) ASSEMBLY	T	M5	(S3)	Phase check and adjustment
㉓	MAIN CAM (2)	T	M5	–	Phase check and adjustment
㉔	ARM GEAR ASSEMBLY	T	M5	(W3), * Collar	Phase check and adjustment
㉕	MOTOR BRACKET ASSEMBLY	T	M5	2(S1)	
㉖	ASSIST SPRING	T	M5	–	
㉗	WORM WHEEL	T	M5	(W1)	
㉘	ROTARY ENCODER ASSEMBLY	T	M6	2(S1), * Switch bracket	Phase check and adjustment
㉙	EJECT LEVER ASSEMBLY	T	M6	–	Phase check and adjustment
㉚	EJECT PLATE	T	M6	–	Phase check and adjustment
㉛	PUSH PLATE	T	M6	(W1), (W4)	NOTE 3)
㉜	CLUTCH LOCK GEAR (2)	T	M6	(P2)	
㉝	CLUTCH LOCK GEAR (1)	T	M6	–	

Table 2-2-1 (A)

Step No.	Parts Name		Fig. No.	Point	Remarks
SLIDE DECK SECTION					
㉞	TENSION ARM ASSEMBLY	T	M7	(W1)	Phase check and adjustment
㉟	PAD ARM ASSEMBLY	T	M7	(W1), (L4), (P3)	NOTE 2)
㊱	REEL BASE ASSEMBLY (SUP SIDE)	T	M7	(W4)	
㊲	MAIN BRAKE ASSEMBLY (SUP SIDE)	T	M7	(W1), (L5), (P4)	
㊳	SUB BRAKE ASSEMBLY	T	M8	(W1), (L6), (P5)	
㊴	MAIN BRAKE ASSEMBLY (TU SIDE)	T	M8	(W1), (L7), (P6)	
㊵	REEL BASE ASSEMBLY (TU SIDE)	T	M8	(W4)	
㊶	CONTROL PLATE ASSEMBLY	T	M8	–	Phase check and adjustment
㊷	SLIDE GUIDE PLATE	T	M8	2(S2)	NOTE 1)
㊸	LID GUIDE	T	M9	2(S1)	
㊹	PRISM (S)	T	M9	(S1)	
㊺	FPC ASSEMBLY	T	M9	(S1)	

Table 2-2-1 (B)

Precaution for assembly

Note 1) *Slide guide plate*
When reassembling the slide guide plate to the slide deck, set the mechanism to the PLAY mode and tightly fasten the slide guide plate with the screw. When the mechanism is set in the EJECT mode, therefore, temporarily fasten the slide guide plate both in disassembling and reassembling.

Note 2) *ad arm assembly*
When reassembling the pad arm assembly to the slide deck, engage the spring with the center groove.

Note 3) *Push plate*
When reassembling the push plate to the main deck, check that its both ends evenly contact the main deck surface when the push plate is pressed. At that time, also check that the clutch lock gear (1) and (2) closely contact the push plate. (Check of clutch mechanism operation)

Note 4) *BBase plate assembly, Slide deck section*
If the clutch lock lever gets loose because of action of the leaf spring and there is a gap left between it and the charge arm assembly in reassembling, it may cause abnormal sliding operation of the slide deck. When reassembling the slide deck section, make sure that there is no gap between the two before fastening the slide deck with screws.

Note 5) *Drum assembly*
When reassembling the drum assembly to the main deck, fasten it with screws according to the screwing order shown in Fig. 2-2-7.

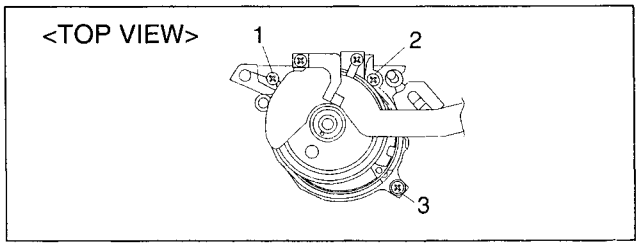

Fig. 2-2-7

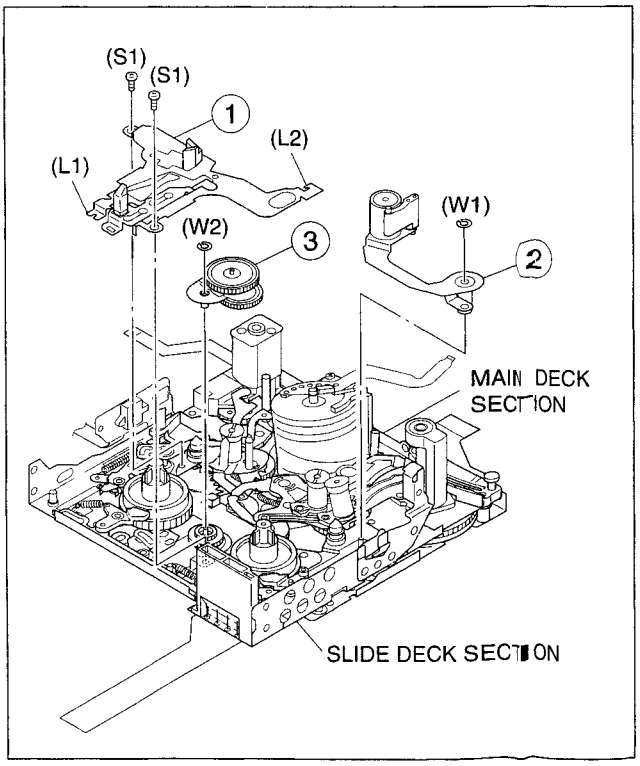

Fig.M1

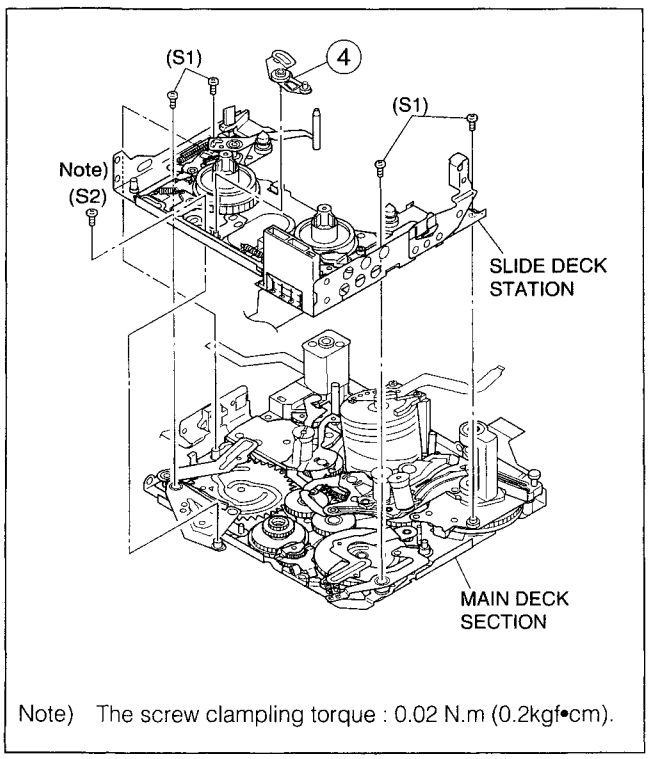

Note) The screw clampling torque : 0.02 N.m (0.2kgf•cm).

Fig. M2

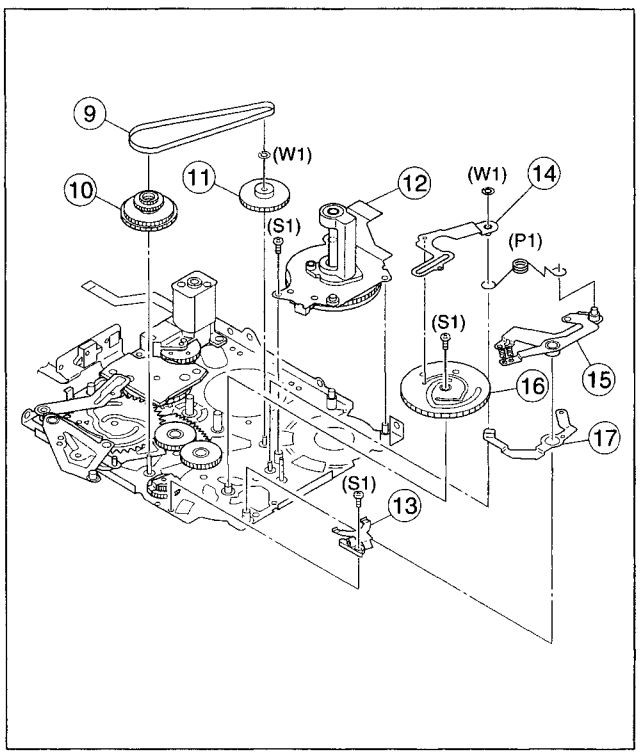

Fig. M4

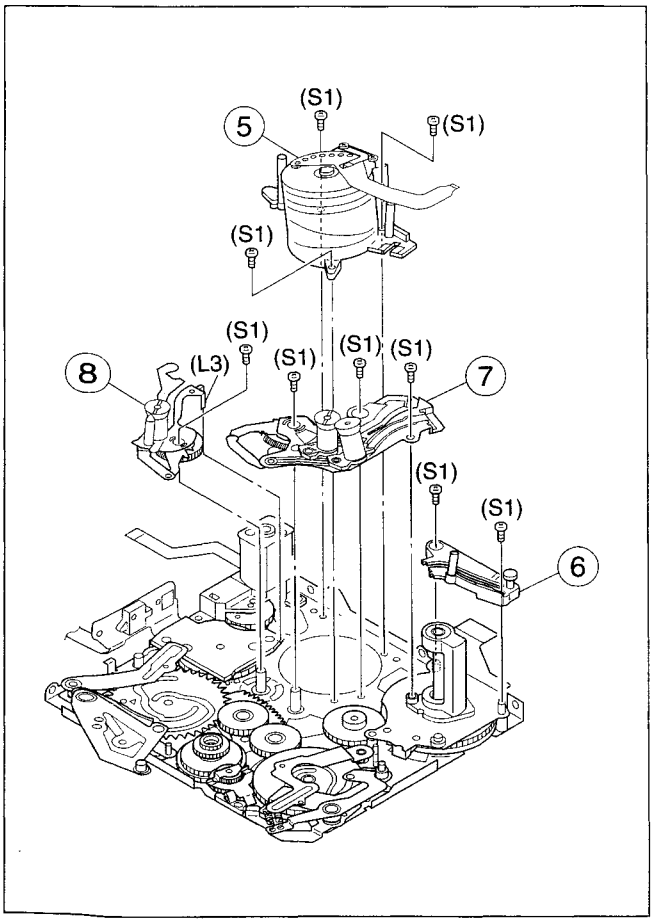

Fig. M3

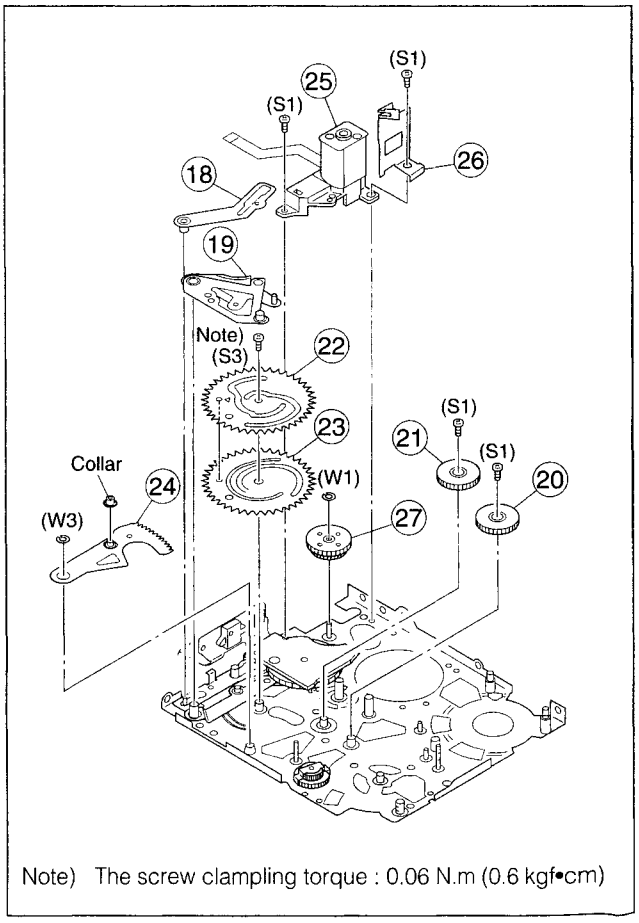

Note) The screw clampling torque : 0.06 N.m (0.6 kgf•cm)

Fig. M5

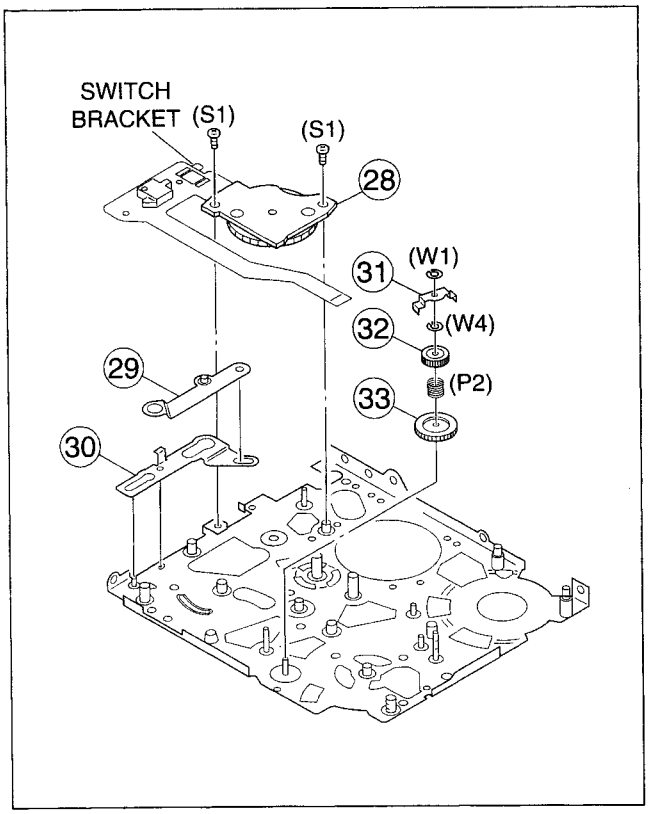

Fig. M6

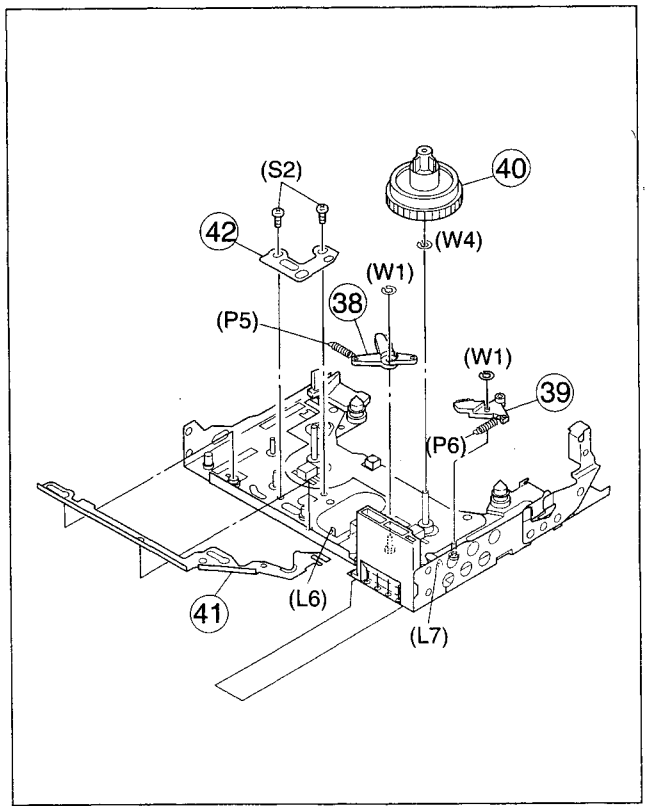

Fig. M8

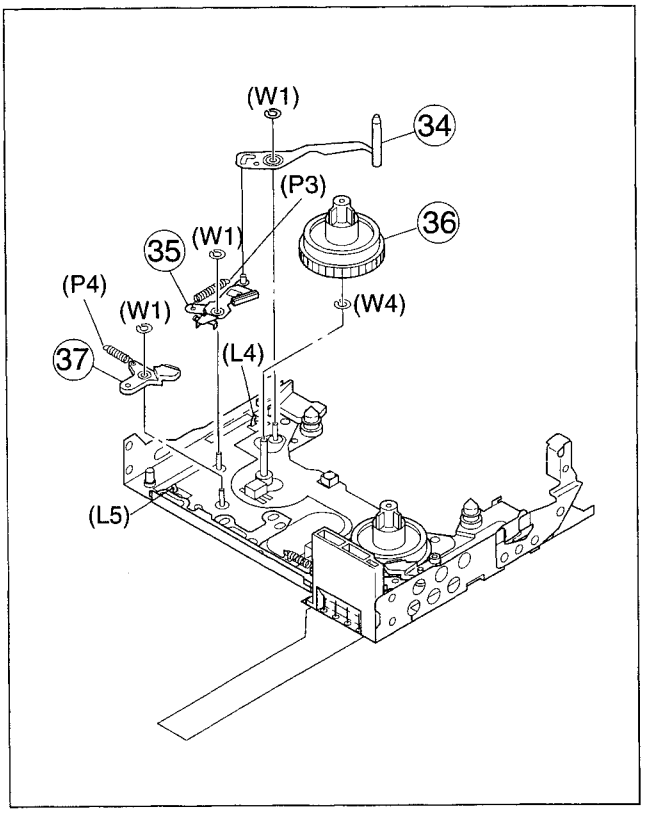

Fig. M7

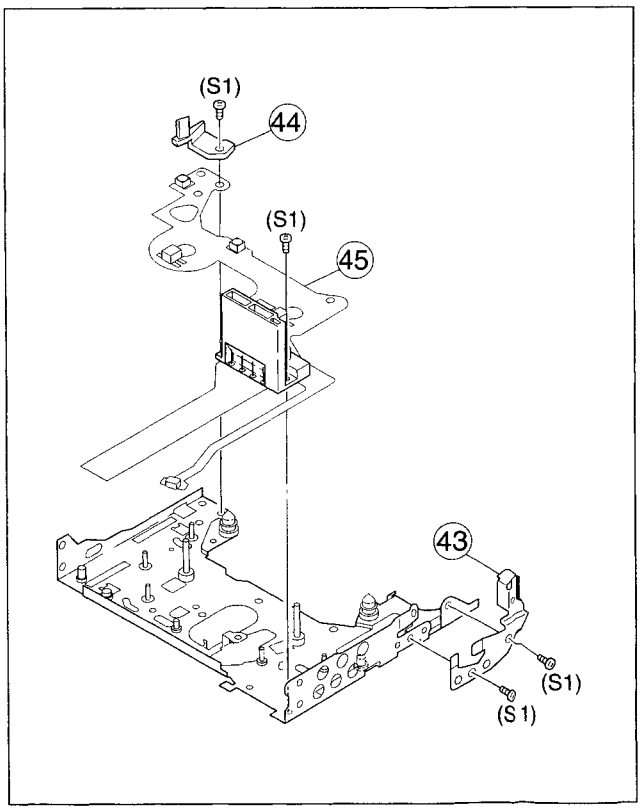

Fig. M9

3. List of procedures for disassembly

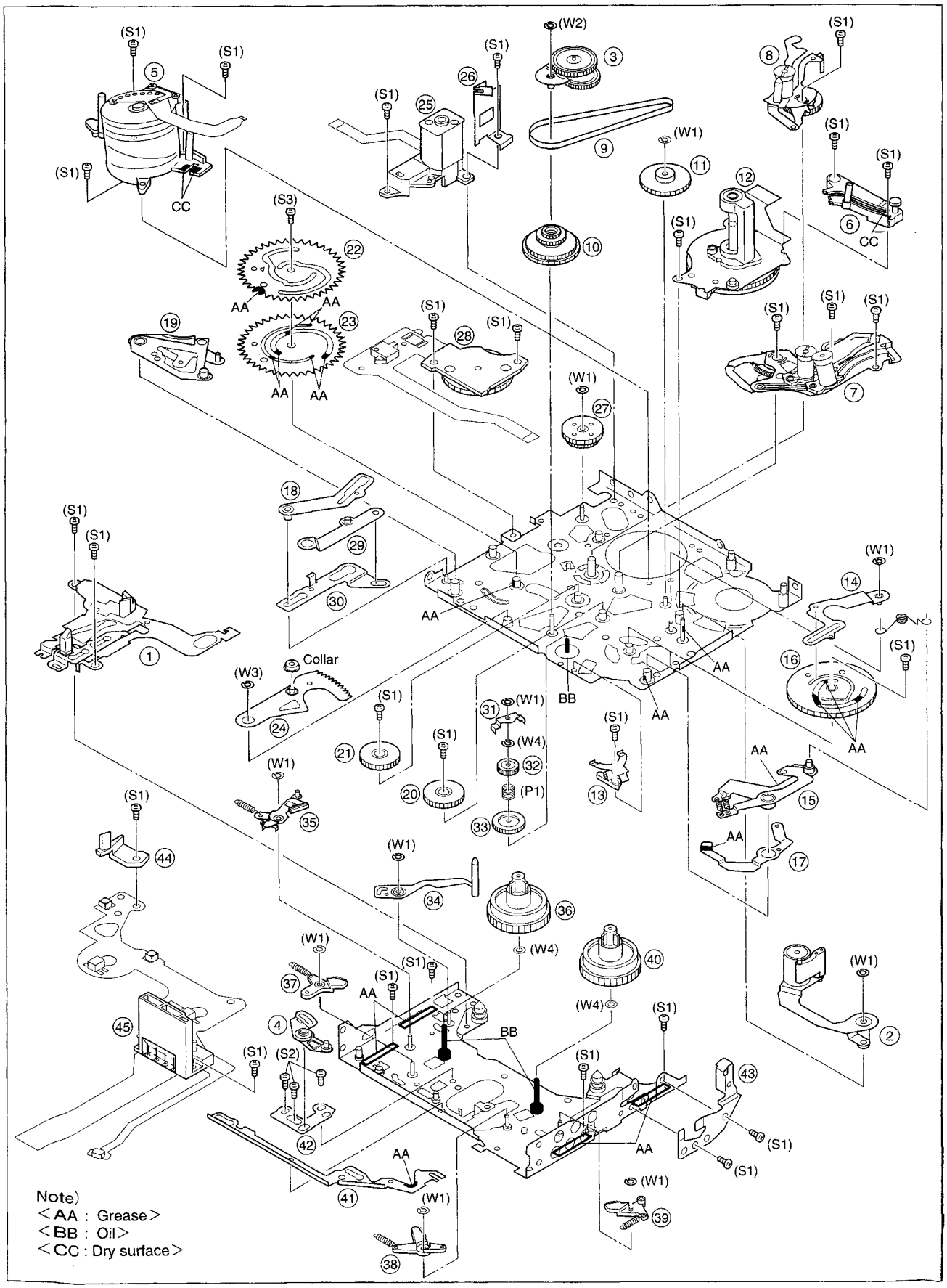

Fig. 2-2-8

2.2.4 Checkup and adjustment of mechanism phase

< SLIDE DECK SECTION >

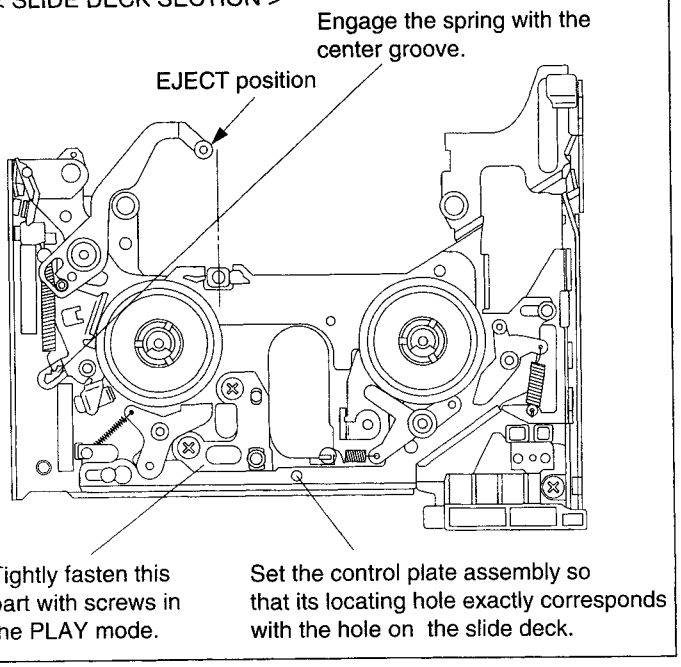

Fig. 2-2-9

< MAIN DECK SECTION >

(Note) • *The locating hole of each part must correspond with the hole on the main deck respectively.*

< BACK SURFACE OF MECHANISM SECTION >

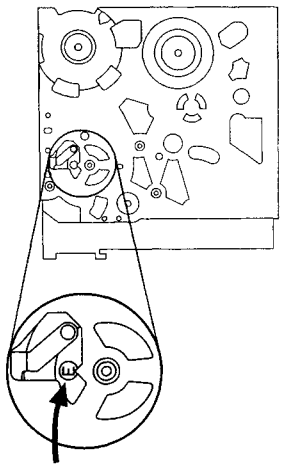

< GUIDE RAIL ASSEMBLY >

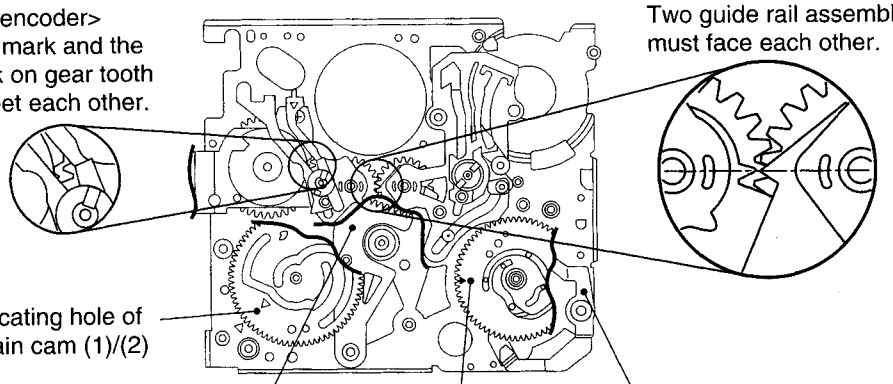

< ALIGNMENT OF PHASE AROUND MAIN CAM (1)/(2)

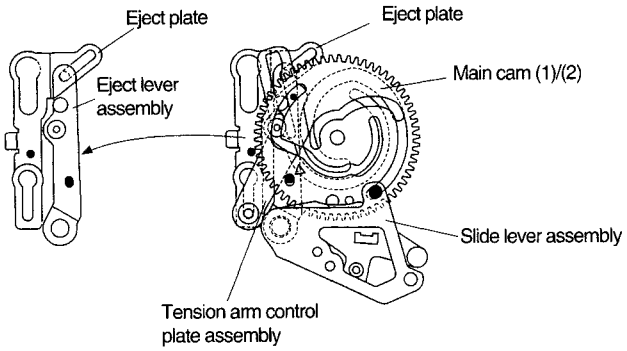

< ALIGNMENT OF PHASE AROUND SUB-CAM GEAR >

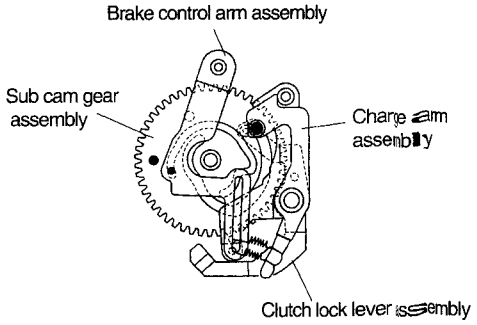

Fig. 2-2-10

2.2.5 Attaching the slide deck and main deck

(1) Make the main deck section enter the EJECT mode. (See Fig. 2-2-11.)
(2) Loosen two screws (A) on the slide deck section (temporarily fastened status). Assemble the slide deck to the main deck and fasten them with four screws (B). (See Fig. 2-2-12.)
(3) Supply 3 V DC to the electrodes of the motor so that the symbol "P" on the sub cam gear assembly is located in the correct position in the PLAY mode. (See Fig. 2-2-13 and 2-2-14.)
(4) Tighten the screw (C) on the slide deck first, and then tighten the two screws (A). (See Fig. 2-2-15.)

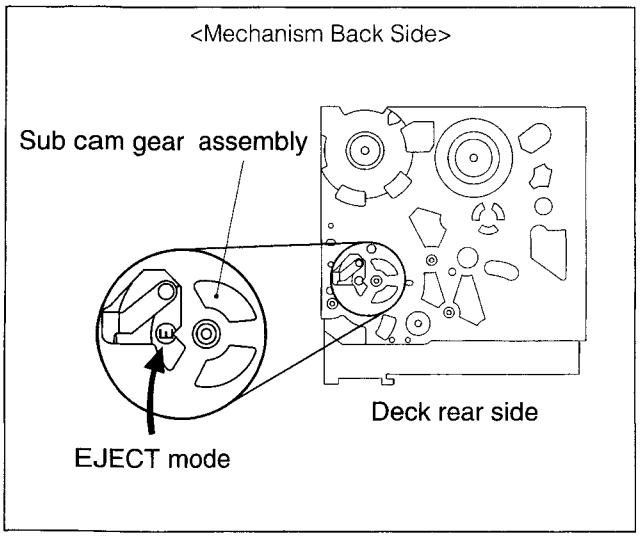

Fig. 2-2-11

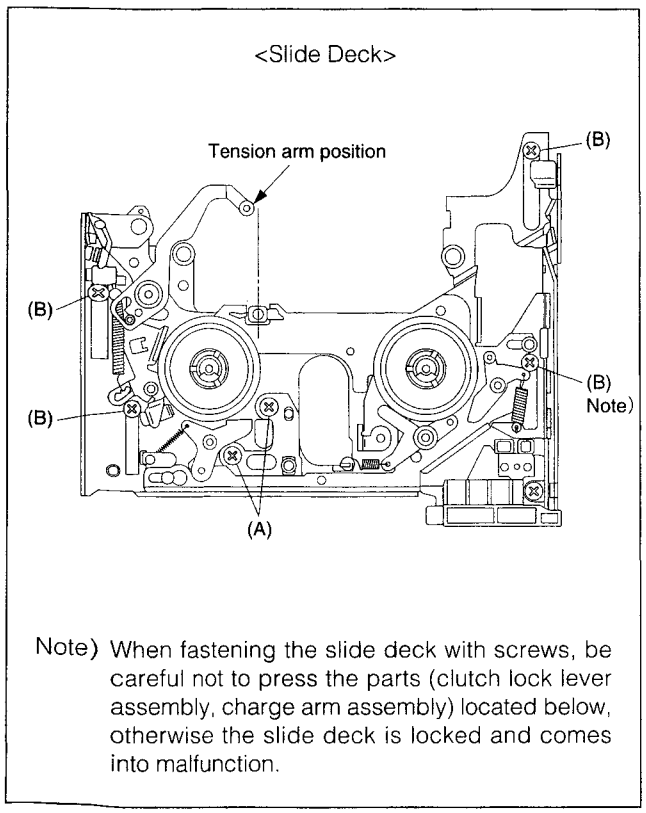

Fig. 2-2-12

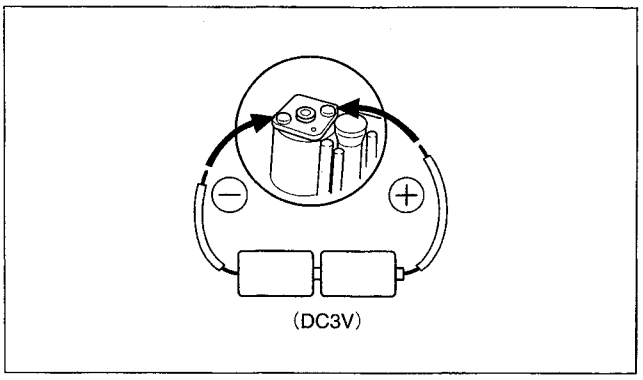

Fig. 2-2-13

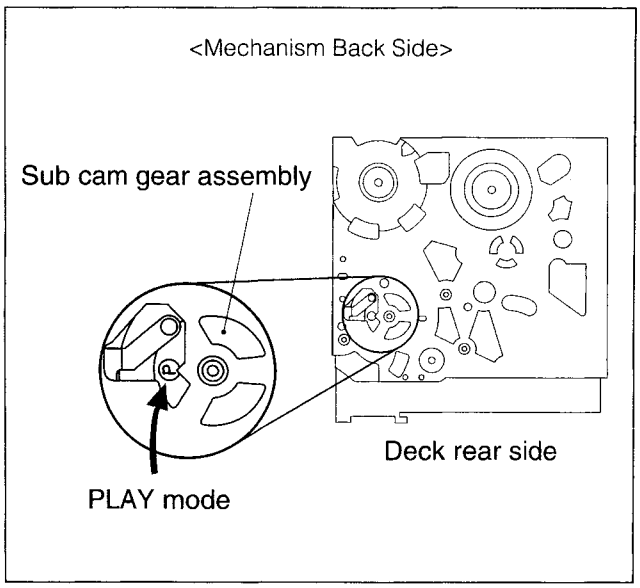

Fig. 2-2-14

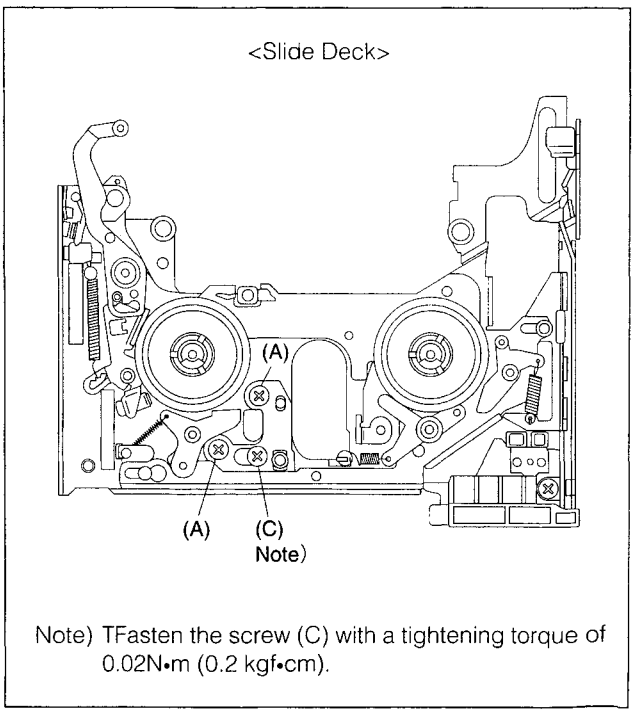

Fig. 2-2-15

2.2.6 Adjustment of tension pole position

(1) Set the mechanism into the PLAY mode. (See Fig. 2-2-14).

(2) Adjust the position of the pole of the tension arm with the screw (A) so that its relative position to the entrance pole is as shown in Fig. 2-2-16. (Adjust the screw (A) with a precise Philips screwdriver ⊕ from the left side.)

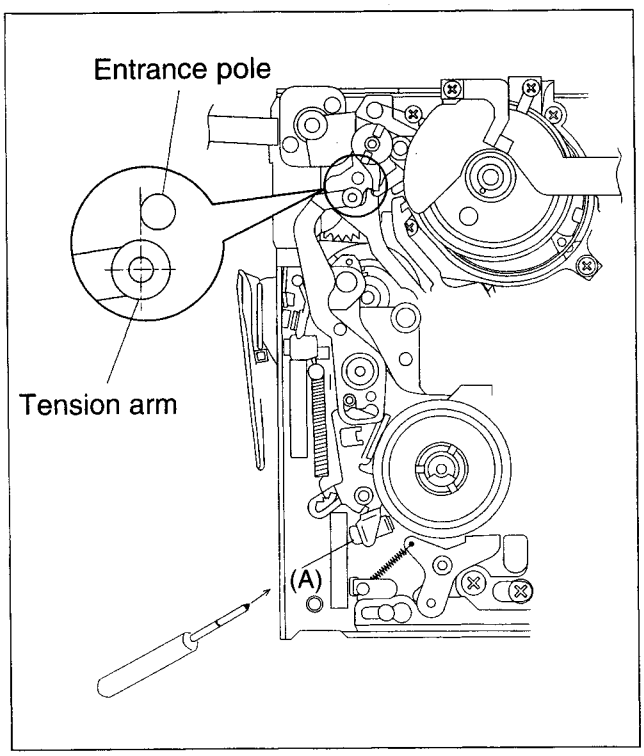

Fig. 2-2-16

2.3 PROCEDURE OF COMPATIBILITY AND P.B. EQ. (ERROR RATE) ADJUSTMENTS

2.3.1 Precautions

Prior to starting disassembling and adjusting work, be sure to make a backup copy of the data stored in the EEPROM (IC4403 on the MAIN-1 board) for the "EEPROM utility" of the SSS software.

Table 2-3-1 shows important service points for adjustment of P.B. EQ. (error rate).

Adjustment item / Service point	Linearity adjustment	P.B. Switching Point adjustment	Head Recording Current adjustment	Error rate (P.B. EQ). adjustment (SP/LP)
Replacement of DRUM	Necessary **Note 1**	Necessary	Necessary	Necessary
Replacement of parts of transport system TU./SUP.GUIDE RAIL	Necessary **Note 1**	Unnecessary	Unnecessary	Check
Repair of parts of tape transport system DRUM TU/SUP. GUIDE RAIL	Necessary **Note 1**	Unnecessary	Unnecessary	Check
Replacement of IC3501 (PRE/MDA BOARD PRE/REC AMP)	Unnecessary	Unnecessary	Necessary	Check
Replacement of IC3502 (PRE/MDA BOARD PB EQ.)	Unnecessary	Unnecessary	Unnecessary	Necessary
Replacement of PRE/MDA BOARD	Unnecessary	Necessary	Necessary	Necessary
Replacement of MAIN1 BOARD **Note 2**	Unnecessary	Unnecessary	Check	Check

Table 2-3-1

Note 1: *Linearity adjustment is needed only after replacement of the drum or replacement/repair of TU/SUP guide rail.*

Note 2: *After replacement of the MAIN-1 board, be sure to write the original data on the EEPROM. After data writing, adjust the camera section. When the MAIN-1 board is replaced for the reason of communication failure, install the original EEPROM on the new MAIN-1 board.*

If adjustment is needed for two or more items, proceed in adjustment of respective items in the following order.

1. Linearity adjustment
   ↓
2. PB switching point adjustment
   ↓
3. Head REC current adjustment
   ↓
4. P.B. EQ. (error rte) adjustment

2.3.2 Linearity adjustment

Procedure of linearity adjustment is shown by the following flowchart.

While triggering an oscilloscope with a signal from pin 14 (HID) of CN116 on the MAIN-1 board, observe the waveform at pin 11 (RF OUT) of CN116 on the MAIN-1 board with the oscilloscope (set for the positive [+] slope).

↓

Play the alignment tape. Then, turn on the ATF (automatic tracking finding) switch for the "VTR deck" of "Remote control utility" of the SSS software. **Note 3**

↓

Make sure that the waveform observed at pin 11 (RF OUT) of CN116 is linear and parallel as a whole without extreme drop and irregularity in the level. If the linearity of the waveform is poor or there is extreme level drop in the waveform, adjust the guide roller by turning it with a roller driver.

↓

Turn off the ATF (automatic tracking finding) switch. Use the "VTR deck" of "Remote control utility" of the SSS software (Note 4). While observing the waveform at pin 11 (RF OUT) of CN116, check to see if the parallelism and linearity of the waveform vary as a whole with change of tracking as shown in Fig. 2-3-1.

↓

Check to see whether the P.B. ENV. waveform is ideally stable and it ideally varies with change of tracking, or not.

No → Repeat the above steps depending on the situation. → Play the alignment tape. Then, turn on the ATF (automatic tracking finding) switch for the "VTR deck" of "Remote control utility" of the SSS software. **Note 3**

Yes ↓

If the P.B. ENV. waveform is ideally stable and it ideally varies with change of tracking, it is recognizable that the linearity is completely adjusted. Finally, check both the audio and video waveforms for the linearity while playing back a previously recorded tape.

Note 3: *In case of the VHS tape recorder, the first tracking point can be locked by means of CTL pulse and DRUM FF when the automatic tracking (AT) function is off, because the VHS tape recorder has an A/C head. Therefore, the linearity of the VHS tape recorder is adjustable even when the AT is off.*
On the other hand, the linearity of the DVC cannot be adjusted when the automatic tracking finding (ATF) function is inactivated, because the DVC has no A/C head. When the ATF of the DVC is off, its tracking operation is effectuated only for the speed control system. Therefore, as time elapses, the DVC gradually fails in the servo control and it becomes hard to adjust the linearity.

Note 4: *In practice, if linearity adjustment is performed within a few minutes after the ATF is switched off, the state (ATF off) may be left out of consideration, because the speed servo of the DVC functions when the ATF is off.*

2.3.3 PB switching point adjustment

Procedure of PB switching point adjustment is shown by the following flowchart.

Set the alignment tape in the deck.

↓

Start adjustment of PB switching point with the "VTR deck" of "Remote control utility" of the SSS software, which automatically carries out PB switching point adjustment.

2.3.4 Head REC current adjustment

Procedure of head REC current adjustment is shown by the following flowchart.

Before starting adjustment, it is required to set up the GR-DVL9000 and test instruments for measuring error rate. For details of the setup and use of the error rate jig, refer to the page 2-15.

Fig. 2-3-1 P.B. ENV. Waveform

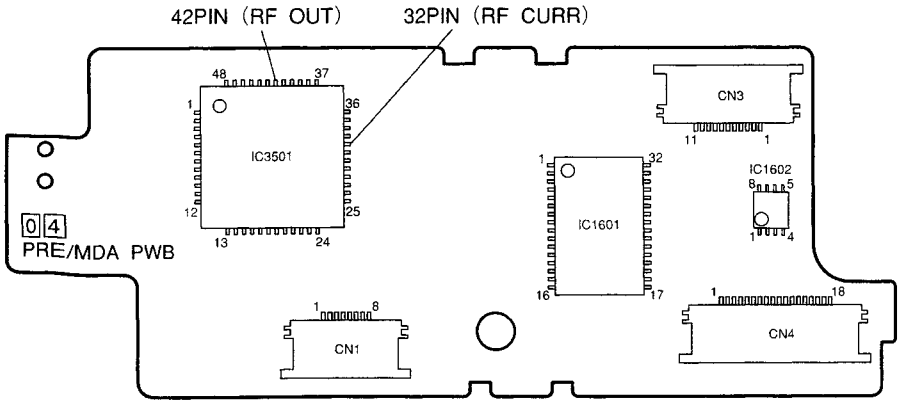

Fig. 2-3-2 PRE/MDA board

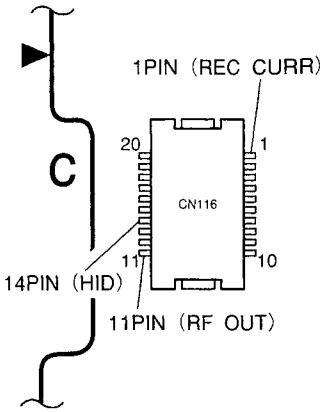

Fig. 2-3-3 MAIN1 board

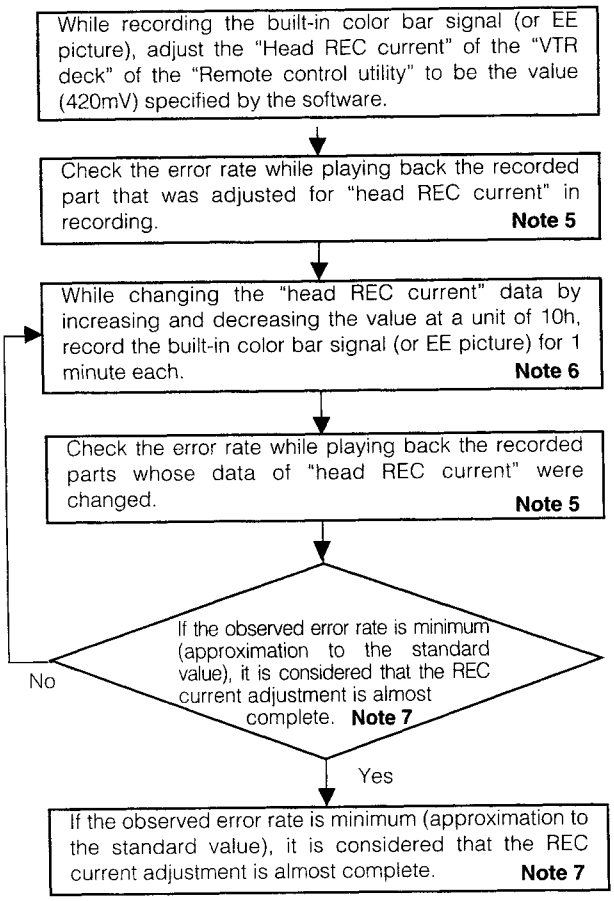

2.3.5 P.B. EQ. (error rate) SP/LP adjustment

Procedure of P.B. EQ. (error rate) adjustment is shown by the following flowchart.

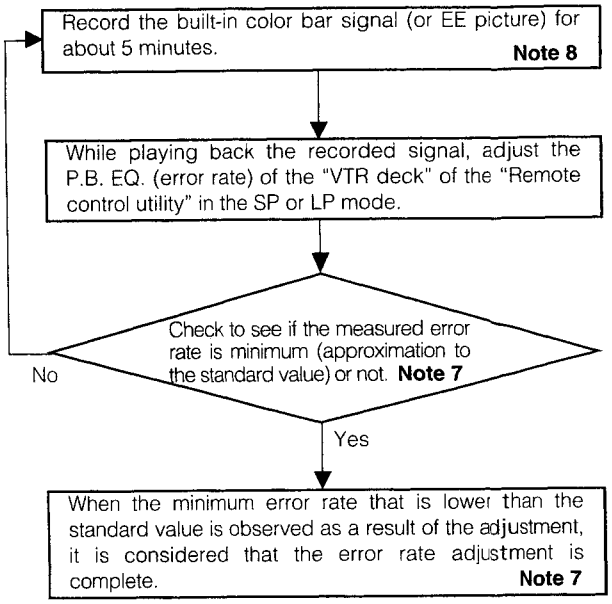

If the minimum error rate does not approximate to the standard value (see **Note 7**) in spite of repeated adjustments, clean the head and tape transport system. If cleaning has no effect on improvement of the error rate, it is thinkable that there is a failure in the head or the preamp shield, or the P.B. EQ. (error rate) is incompletely adjusted. In such the case, try to proceed in P.B. EQ. adjustment with the alignment tape prior to adjustment of "head REC current". In other words, if there is something abnormal in the playback system, the indication of the error rate is meaningless. Therefore, it is recommended to perform the "P.B. EQ. (error rate) adjustment" roughly with the alignment tape after completion of the "linearity adjustment" (to adjust error rate to be almost approximate to the standard value), because it facilitates the adjustment of the "head REC current".

Note 5: *Be sure to disconnect the cable from pin 1 (REC CURR - recording current test point) of CN116 on the MAIN-1 board. If the cable is connected with the pin 1, measurement of the error rate results in failure (error rate is may be measured approximately 10 times as high as the standard value).*

Note 6: *The value of the "head REC current" specified on the software is not always optimum.*

Note 7: *In the strict sense of the word, "approximation to the standard value" means a value that is slightly lower than the specified value. Specified values are as follows.*
CH1 or CH2: Less than 1,500 (less than 3,000 in total of CH1 and CH2),
Difference between channels: Less than 10 times between CH1 and CH2.CH1 and CH2.

Note 8: *It is advised to use a new cassette tape or an unrecorded part of a used cassette tape for recording. If a damaged tape is used for recording, it results not only in an error of the error rate measurement (measurement result becomes considerably higher than the real value) but also in loss of the reliability of adjustment.*

2.3.6 Setup and use of error rate jig

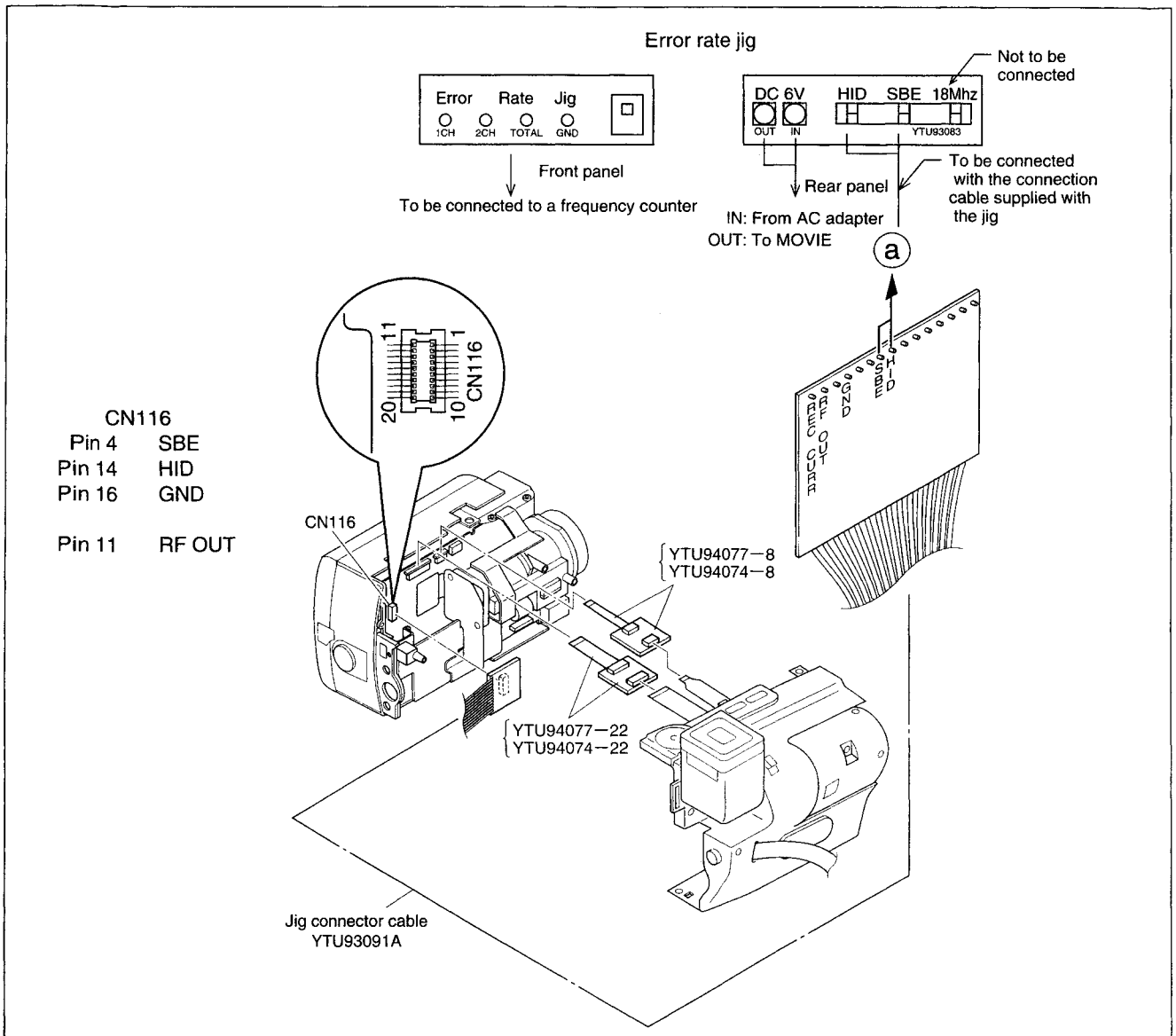

Note) For connection of the jig connector cable, remove the exterior parts (hood cap, front cover assembly, lower case assembly with E. VF assembly) referring to the pages 1-4 and 1-5.
After removing those exterior parts, connect the E. VF assembly and OPE (deck) to the MAIN-1 board respectively with the patch cords.

Fig. 2-3-4 Connection of error rate jig

Fig. 2-3-4 illustrates connection of the error rate jig for error rate adjustment. Use the error rate jig for measuring frequencies as mentioned below.

First of all, prepare a new cassette tape for recording. When using a used cassette tape, it is desirable to use an unrecorded part of it.

1. Record the built-in color bar signal (or EE picture) and play it back.
2. When playing back the recorded signal, change the connection of the frequency counter to the CH1, CH2 and TOTAL of the error rate jig one after another for measuring each frequency.
3. For example, if the frequency counter indicates "1.3 kHz", read it as "1,300" (of an error rate).
   Minimize the error rate as low as possible so that it should be less than 1,500 (maximum) for one channel or less than 3,000 (maximum) in total of the CH1 and CH2.
   When there is an extreme difference (10 times or more) in the measured error rates between the two channels, it is thinkable that there is a failure in the head or preamp shield.

Note 9: *Since the following test points are subject to change for the reason of production, carefully find out the correct test point before connecting the cable to it. Both HID waveform and SBE waveform can be checked with an oscilloscope, because their DC levels are almost the same as shown below.*

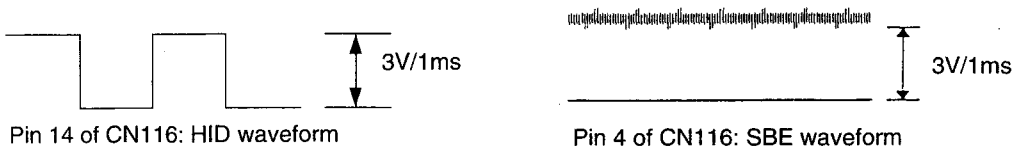

Fig. 2-3-5 HID/SBE waveform

Note 10: *Output waveforms of the error rate jig are as shown below. If the observed waveform is different from the standard waveform shown below, it is thinkable that the error rate jig malfunctions. In such a case, check to see if HID, SBE signals and 6 V DC are certainly input to the error rate jig first and then try to observe those waveforms once more. If the observed waveform is still different from the standard though both signals and 6 V DC are input to the error rate jig without fail, it maybe results from a failure of the jig.*

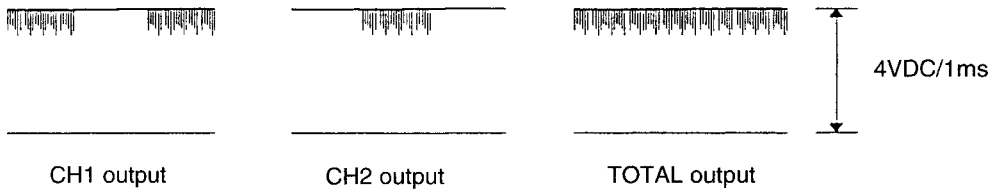

Fig. 2-3-6 Output waveforms of error rate jig

Note 11: *Set the gate time of the frequency counter at 1 second. Regarding the frequency counter to be used, it must be a type that sensitivity (threshold level) is adjustable. For finding out an optimum sensitivity of the frequency counter, turn the level control knob gradually from the positive side to the negative side until it reads any value of frequency, and set the level control knob at an approximate midpoint between the counting start point in the positive side and that in the negative side (see Fig. 2-3-7). For, if the level control knob is set near a counting start point, it results in reading of a wrong error rate, because noise is generated in the upper and lower sides of the error rate waveform as shown in the figure.*

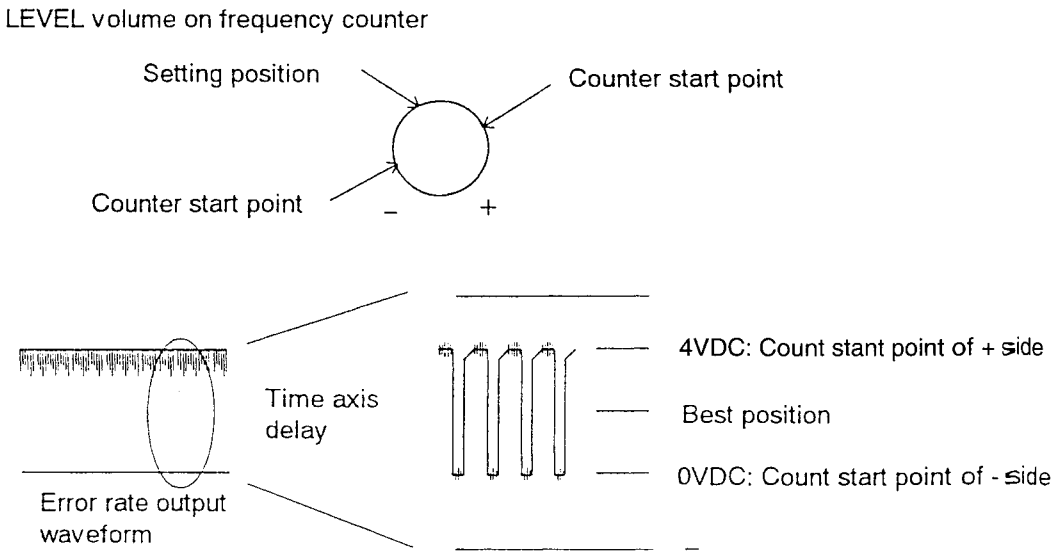

Fig. 2-3-7 Adjustment of sensitivity level

2.4 REMARKS

2.4.1 Cleaning

(1) For cleaning the upper drum (head in particular), use fine woven cotton cloth or Kim wipe that is moistened with alcohol. When cleaning, don't move the wiper but turn the upper drum counterclockwise while pressing the moistened wiper to it. After that, wipe it down with dry cloth to remove moisture from the surface.

Note
- *Never wipe the upper drum vertically (in the up-and-down direction) because it may cause damage to the head.*
- *Be careful not to touch the disc on the top of the upper drum with bare hands.*

(2) For cleaning the parts of the tape transport system except the drum assembly, wipe them fine woven cotton cloth or cotton swab that is moistened with alcohol.

(3) After cleaning, make sure that the cleaned parts are completely dry before inserting a cassette tape.

2.4.2 OILING AND GREASING

(1) Since the GR-DVL9000 has no need of regular oiling and greasing, apply oil or grease to the new part(s) only after replacement of the part. If oil or grease applied to the mate part is dirty or worn down, wipe it out and apply it new oil or grease at the same time.

(2) For the parts subject to lubrication, refer to the exploded view of the mechanism (Drawing No. M3 on page 5-7). For the oil and grease to be used for respective parts, refer to Table 2-4-1.

(3) When oiling, clean the objective part and its periphery with soft cloth moistened with alcohol first and then apply one or two drops of oil to it.
If oil is dripped too much, it may cause not only outflow of the oil but slip of rotary parts.

Lubricant	Name	Part No.	Symbol in drawing
Grease	Grease	KYODO-SH-P	AA
Oil	COSMO-HYDRO HV100	YTU94027	BB
Grease	Drysurf	XF-200R	CC

Table 2-4-1 Grease and oil

2.5 MECHANISM TIMING CHART

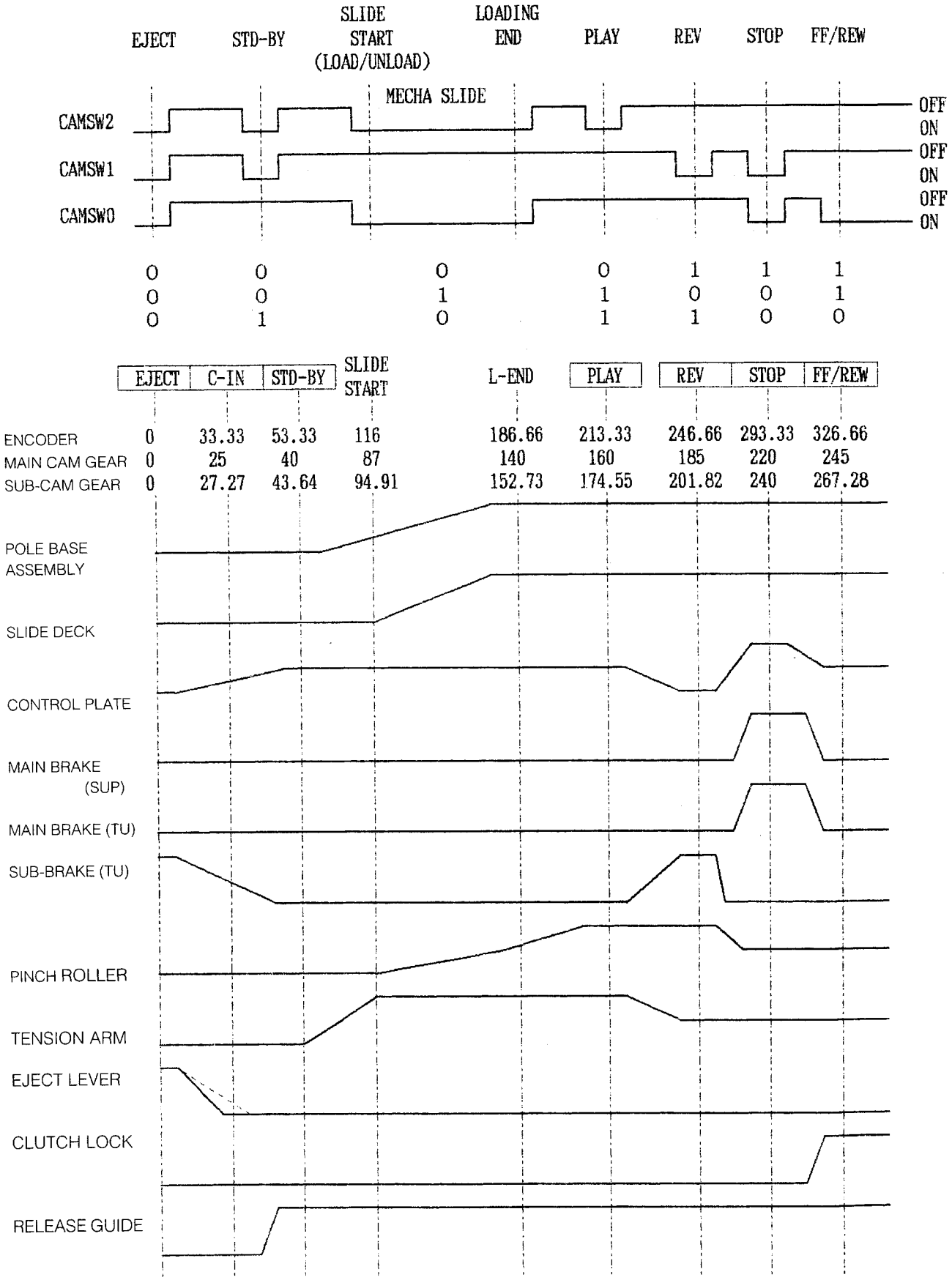

Fig. 2-5-1

SECTION 3
ELECTRICAL ADJUSTMENT

3.1 PREPARATION BEFORE ADJUSTMENT

3.1.1 Precautions

Both the deck and camera sections of this model are designed to be adjustment-free. However, if the following part is replaced, the set must be brought into a JVC service center having a complete set of service equipment, because it needs special adjustment with a personal computer in such a case.

- OP block
- EEPROM (IC4403 on MAIN-1 board)

When there is some trouble with the electric circuit, it is required to detect the part of the failure with specified test instruments first and then to proceed to adjustment, repair or replacement. Matters that require attention:

(1) When checking at a chip test point, be sure to use an IC clip or the like not to apply it any stress.
When replacing a chip part (IC in particular), completely remove solder from it and its periphery before replacement (to avoid exfoliation of the pattern).
(2) Carefully connect/disconnect a connector because it is apt to get damaged.

3.1.2 Required test equipment

① Personal computer (operated on Windows OS)
② Color video monitor
③ Oscilloscope (dual-trace type, observable 100 MHz or higher frequency)
* It is recommended to use one observable 300 MHz or higher frequency.
④ Digital voltmeter
⑤ DC power supply
⑥ Frequency counter (with threshold level adjustment)

3.1.3 Jigs necessary for electrical adjustment

For jigs necessary for electrical adjustment, refer to pages 1-2 and 1-3 of the Section 1.

3.1.4 Setup

1. Setup for electrical adjustment with personal computer (Type I)

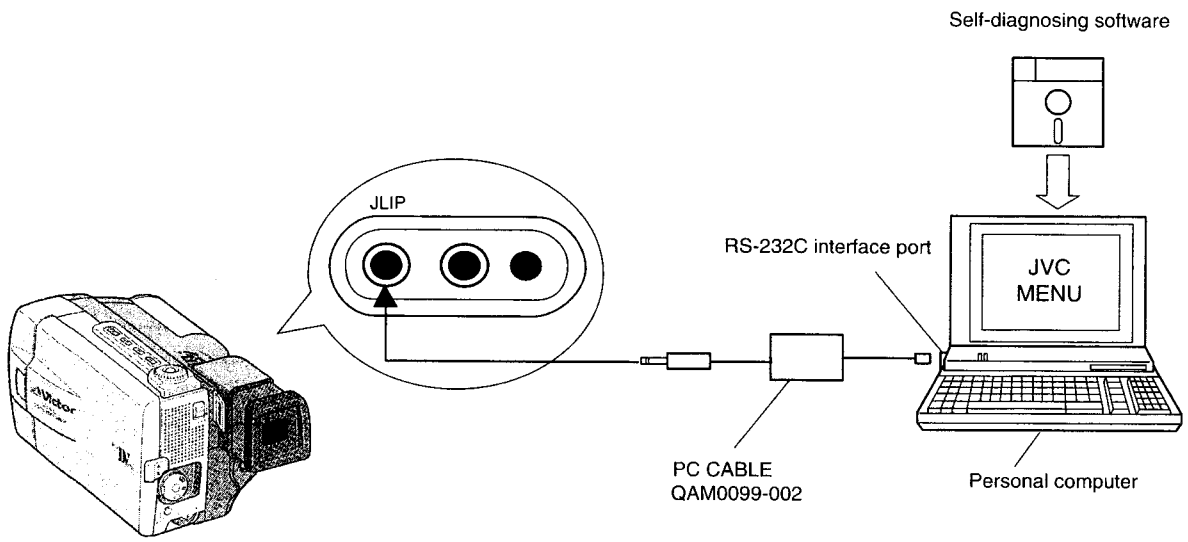

Fig. 3-1-1 Setup for electrical adjustment with personal computer (I)

3.1.5 Setup for electrical adjustment with personal computer (Type II)

NOTE:
When connecting the jig connector cable, remove the hood cap, AL plate, front cover assembly, lower case assembly together with E. VF assembly beforehand referring to pages 1-4 and 1-5 of the Section 1.
After removing those exterior parts, connect the E. VF assembly and OPE (deck) respectively to the MAIN-1 board with patch cords.

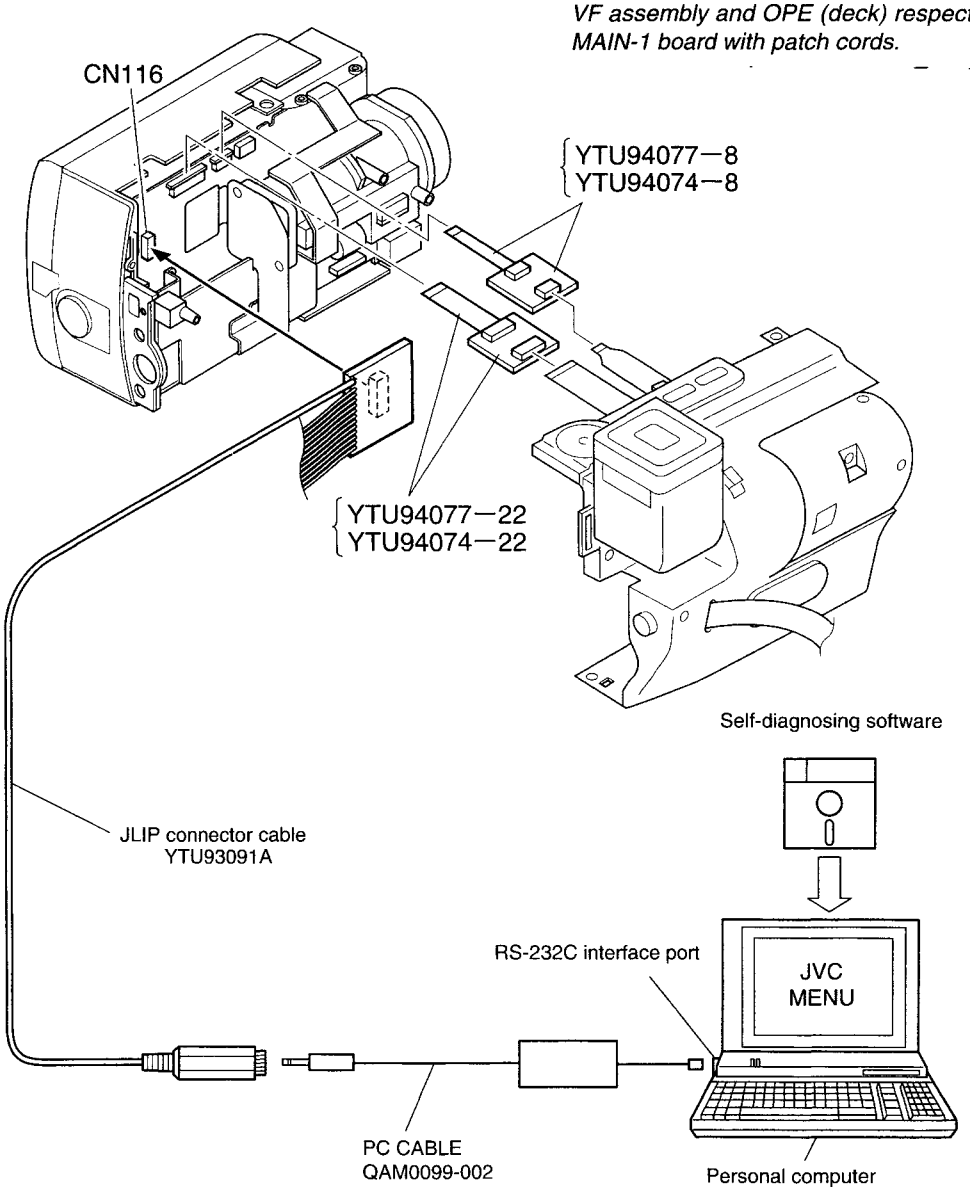

Fig. 3-1-2 Setup for electrical adjustment with personal computer (II)

SECTION 4
CHARTS AND DIAGRAMS

NOTES OF SCHEMATIC DIAGRAM

Safety precautions
The Components identified by the symbol ⚠ are critical for safety. For continued safety, replace safety critical components only with manufacturer's recommended parts.

1. Units of components on the schematic diagram

Unless otherwise specified.

1) All resistance values are in ohm, 1/6 W, 1/8 W (refer to parts list).
   Chip resistors are 1/16 W.
   K: KΩ (1000Ω), M: MΩ (1000KΩ)
2) All capacitance values are in μF, (P: PF).
3) All inductance values are in μH, (m: mH).
4) All diodes are 1SS133, MA165 or IN4148M (refer to parts list).

2. Indications of control voltage

AUX : Active at high

$\overline{\text{AUX}}$ or AUX(L) : Active at low

3. Interpreting Connector indications

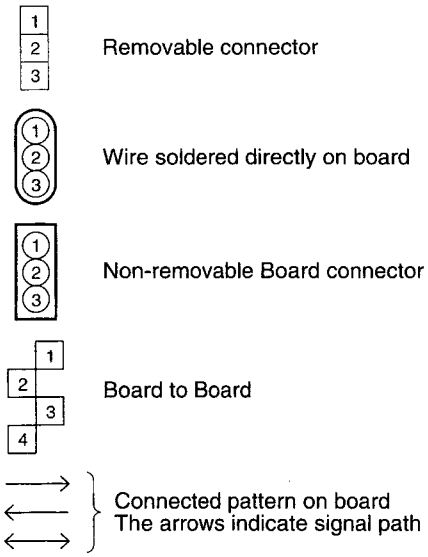

4. Voltage measurement

1) Video circuits
   REC : Colour bar signal in SP mode, normal VHS mode
   PB : Alignment tape, colour bar SP mode, normal VHS mode
   — : Unmeasurable or unnecessary to measure
2) Audio circuits
   REC : 1KHz, –8 dBs sine wave signal in SP mode, Normal VHS mode
   PB : REC then playback it
3) Movie Camera circuits
   Measured using a correctly illuminated gray scale or colour bar test charts in the E-E mode
4) Indication on schematic diagram
   Voltage Indications for REC and PB mode on the schematic diagram are as shown below.

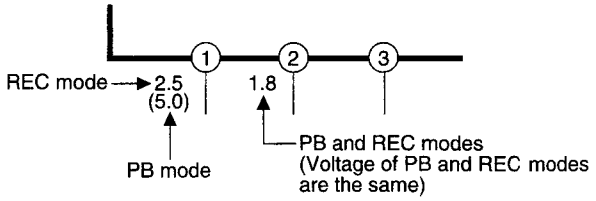

Note: If the voltages are not indicated on the schematic diagram, refer to the voltage charts.

5. Waveform measurement

1) Video circuits
   REC : Colour bar signal in SP mode, normal VHS mode
   PB : Alignment tape, colour bar SP mode, normal VHS mode
2) Audio circuits
   REC : 1KHz, –8 dBs sine wave signal in SP mode, normal VHS mode
   PB : REC then playback it
3) Movie Camera circuits
   Measured using a correctly illuminated gray scale or colour bar test chatrs in the E-E mode
4) Indication on schematic diagram
   Waveform indications on the schematic diagram are as shown below.

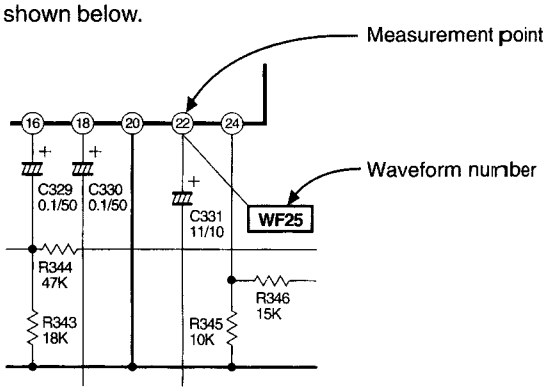

5) Waveform indications

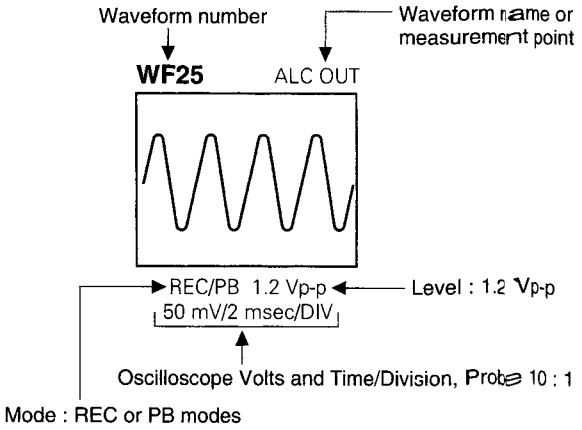

6. Signal path Symbols

The arrows indicate the signal path as follows.

Playback signal path

 Playback and recording signal path

Recording signal path
(including E-E signal path)

Capstan servo path

Drum servo path

(Example)

R-Y Playback R-Y signal path

Y Recording Y signal path

7. Indication of the parts for adjustments

The parts for the adjustments are surrounded with the circle as shown below.

8. Indication of the parts not mounted on the circuit board

"OPEN" is indicated by the parts not mounted on the circuit board.

CIRCUIT BOARD NOTES

1. Foil and Component sides

1) Foil side (B side) :
Parts on the foil side seen from foil face (pattern face) are indicated.
2) Component side (A side) :
Parts on the component side seen from component face (parts face) indicated.

2. Parts location guides

Parts location are indicated by guide scale on the circuit board.

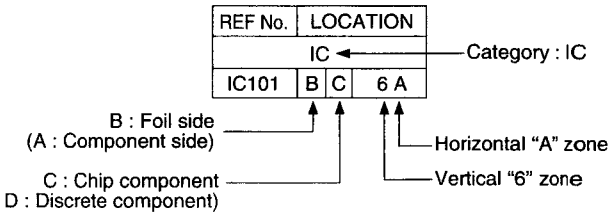

Note:

For general information in service manual, please refer to the Service Manual of GENERAL INFORMATION Edition 4 No. 82054D (January 1994).

4.1 BOARD INNTERCONNECTIONS

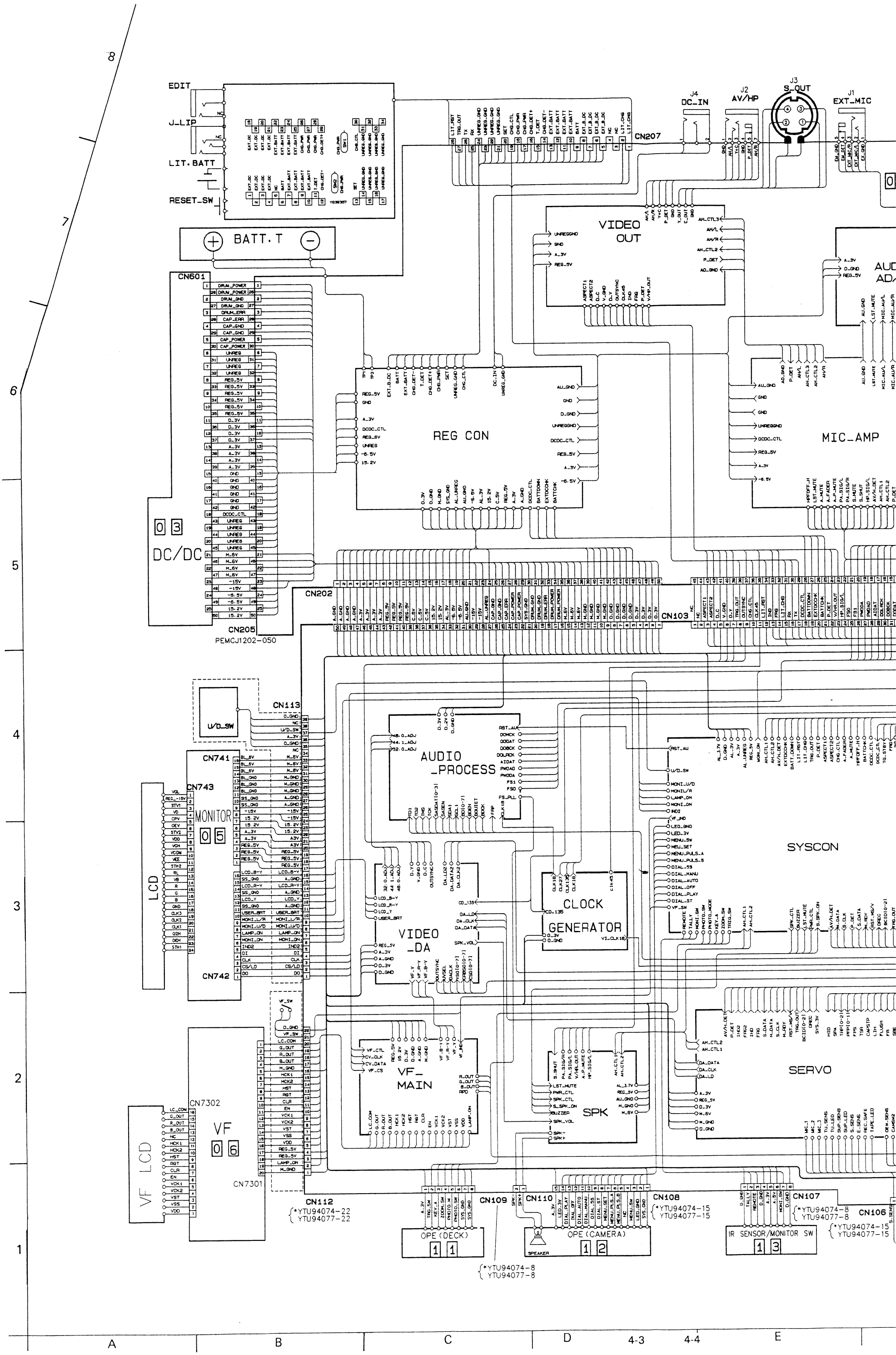

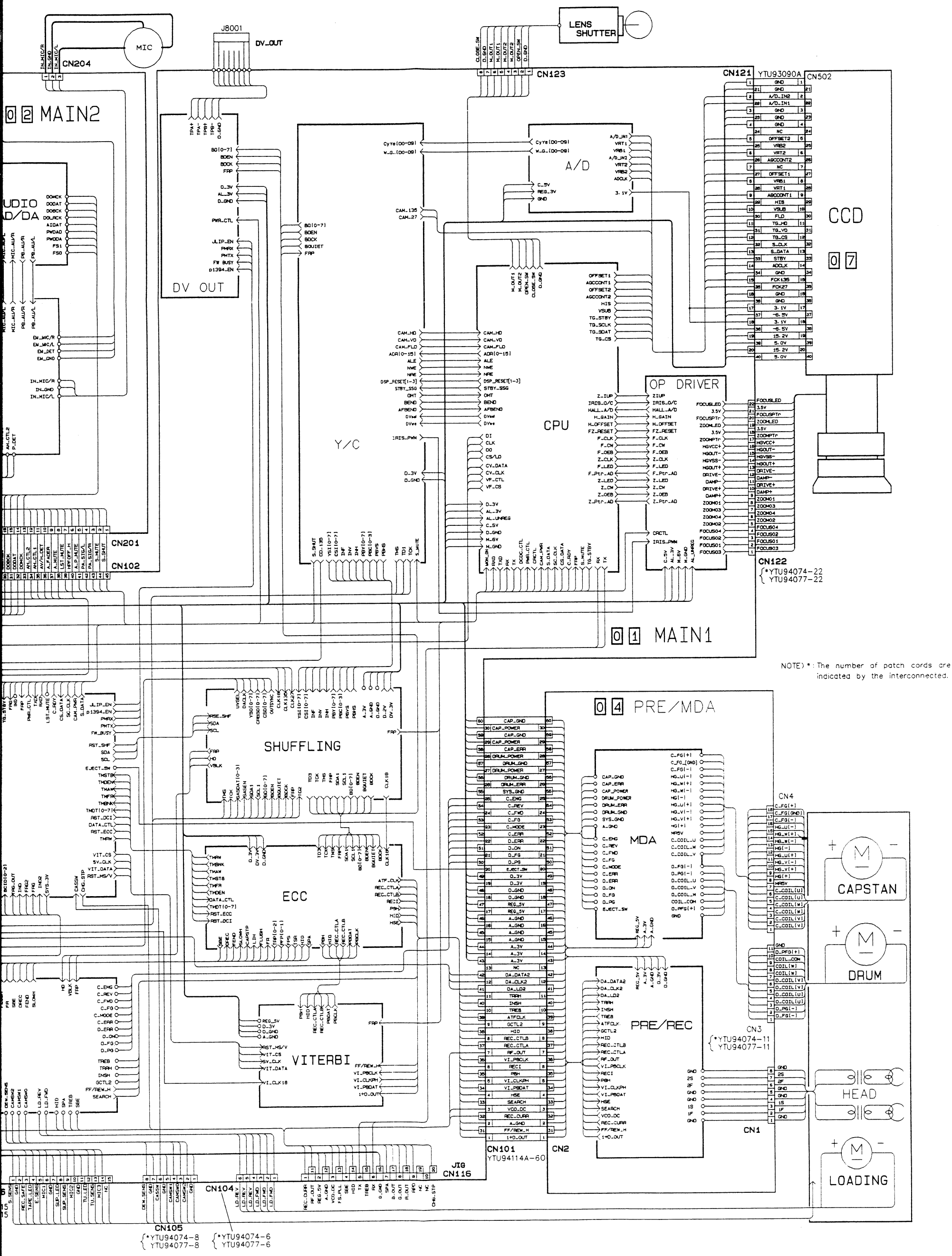

4.1 BOARD INNTERCONNECTIONS

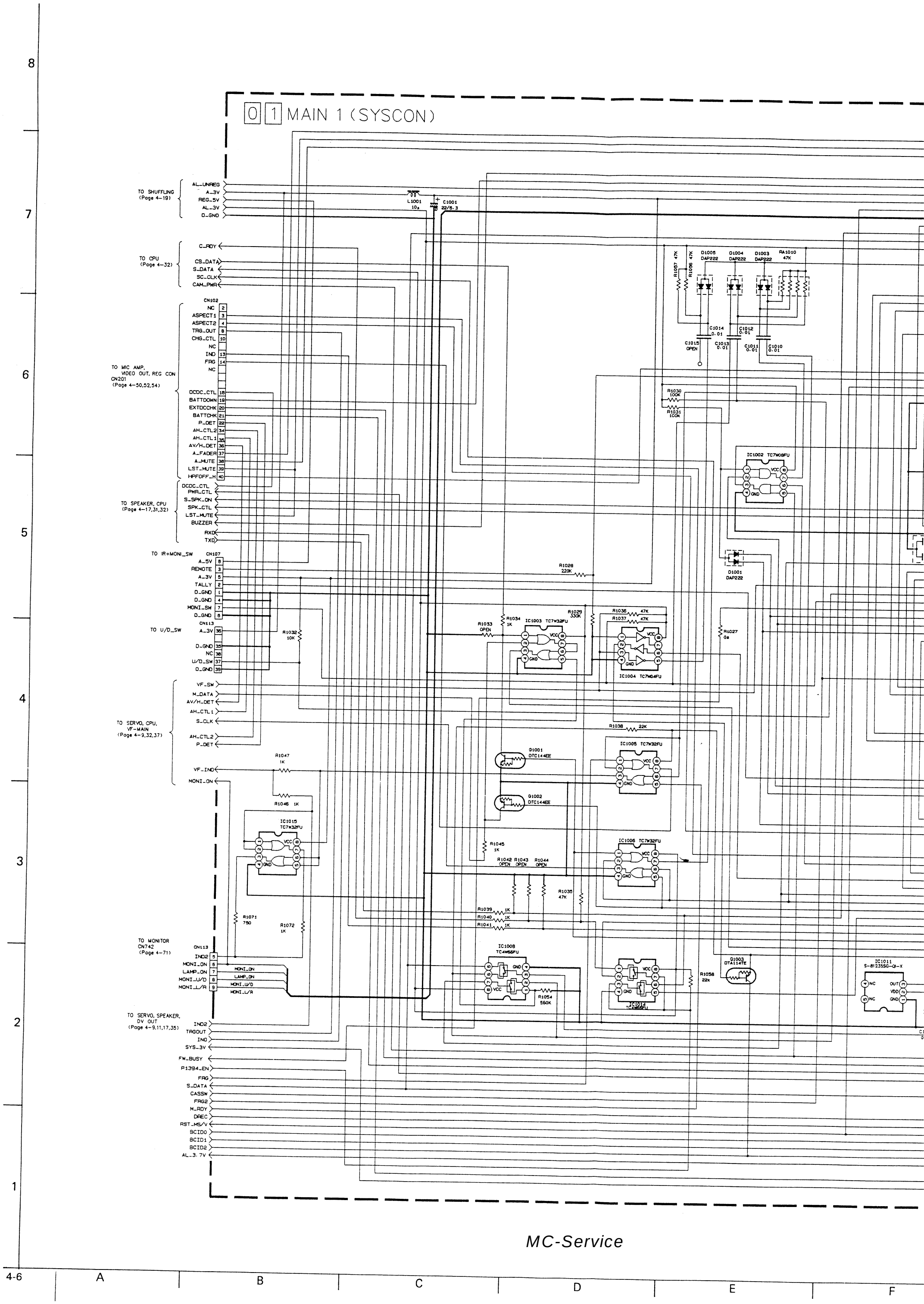
01 MAIN 1 (SYSCON)
TO SHUFFLING (Page 4-19)
AL_UNREG
A_3V
REG_5V
AL_3V
D_GND
TO CPU (Page 4-32)
C_RDY
CS_DATA
S_DATA
SC_CLK
CAM_PWR
TO MIC AMP, VIDEO OUT, REG CON CN201 (Page 4-50,52,54)
CN102
NC
ASPECT1
ASPECT2
TRG_OUT
CHG_CTL
IND
FRG
DCDC_CTL
BATTDOWN
EXTDCCHK
BATTCHK
P_DET
AH_CTL2
AH_CTL1
AV/H_DET
A_FADER
A_MUTE
LST_MUTE
HPFOFF_H
TO SPEAKER, CPU (Page 4-17,31,32)
PWR_CTL
S_SPK_ON
SPK_CTL
BUZZER
RXD
TXD
TO IR+MONI_SW
CN107
A_5V
REMOTE
A_3V
TALLY
MONI_SW
TO U/D_SW
CN113
U/D_SW
TO SERVO, CPU, VF-MAIN (Page 4-9,32,37)
VF_SW
M_DATA
S_CLK
VF_IND
MONI_ON
TO MONITOR CN742 (Page 4-71)
LAMP_ON
MONI_U/D
MONI_L/R
TO SERVO, SPEAKER, DV OUT (Page 4-9,11,17,35)
TAGOUT
SYS_3V
FW_BUSY
P1394_EN
CASSW
FRG2
M_RDY
DREC
RST_MS/V
SCID0
SCID1
SCID2
AL_3.7V
L1001 10μ
C1001 22/6.3
R1057 47K
R1056 47K
D1005 DAP222
D1004 DAP222
D1003 DAP222
RA1010 47K
C1014 0.01
C1012 0.01
C1015 OPEN
C1013 0.01
C1011 0.01
C1010 0.01
R1030 100K
R1031 100K
IC1002 TC7W08FU
D1001 DAP222
R1028 220K
R1029 330K
R1034 1K
R1033 OPEN
IC1003 TC7W32FU
R1036 47K
R1037 47K
IC1004 TC7W04FU
R1027 0Ω
R1032 10K
R1038 22K
IC1005 TC7W32FU
Q1001 DTC144EE
Q1002 DTC144EE
R1047 1K
R1046 1K
IC1015 TC7W32FU
R1045 1K
IC1006 TC7W32FU
R1042 OPEN
R1043 OPEN
R1044 OPEN
R1035 47K
R1039 1K
R1040 1K
R1041 1K
R1071 750
R1072 1K
IC1008 TC4W66FU
R1054 560K
IC1014 TC4W66FU
R1058 22K
Q1003 DTA114TE
IC1011 S-81235SG-QI-X
NC
OUT
VDD
GND
VCC

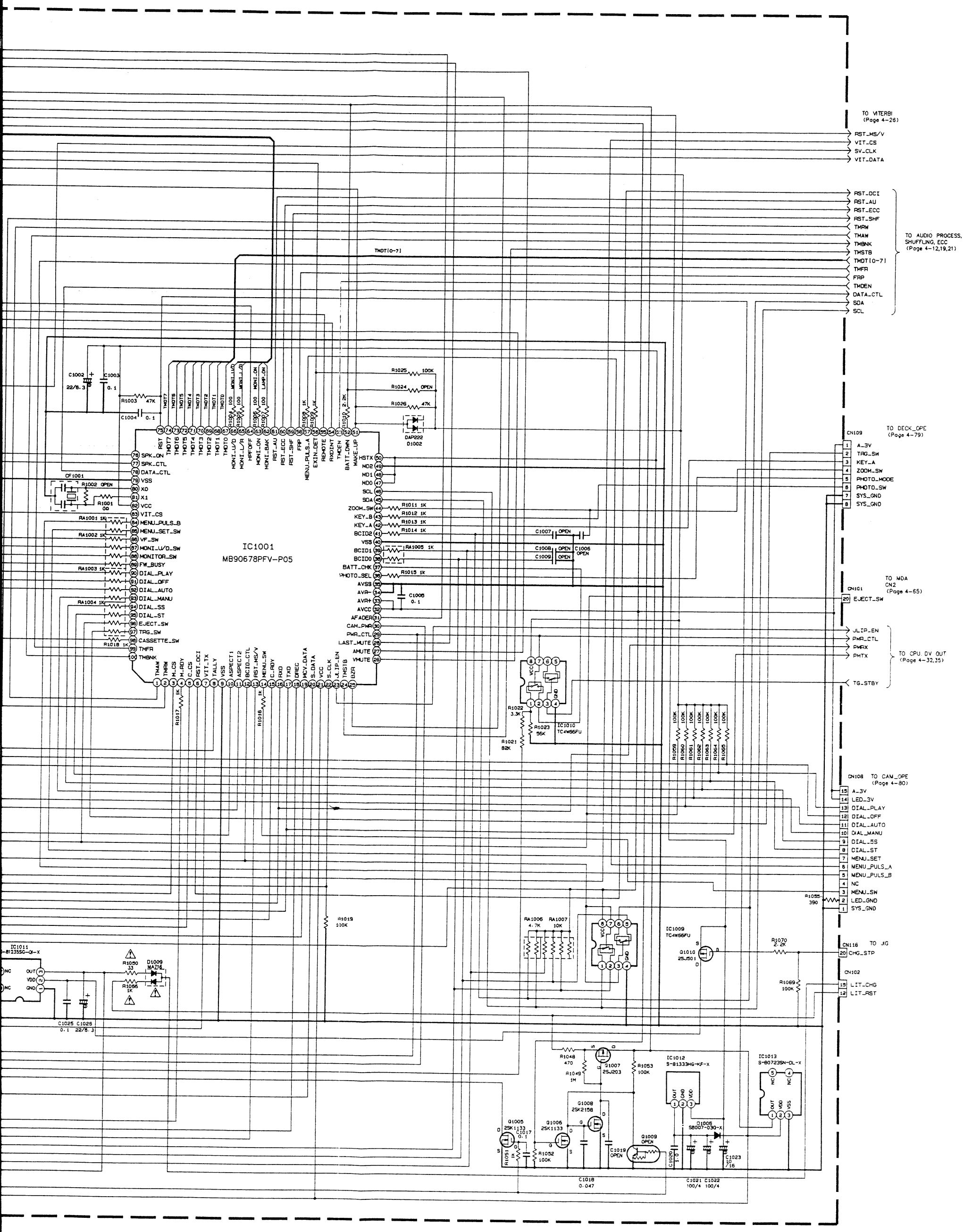

4.2 SYSCON SCHEMATIC DIAGRAM

4.3 SERVO SCHEMATIC DIAGRAM

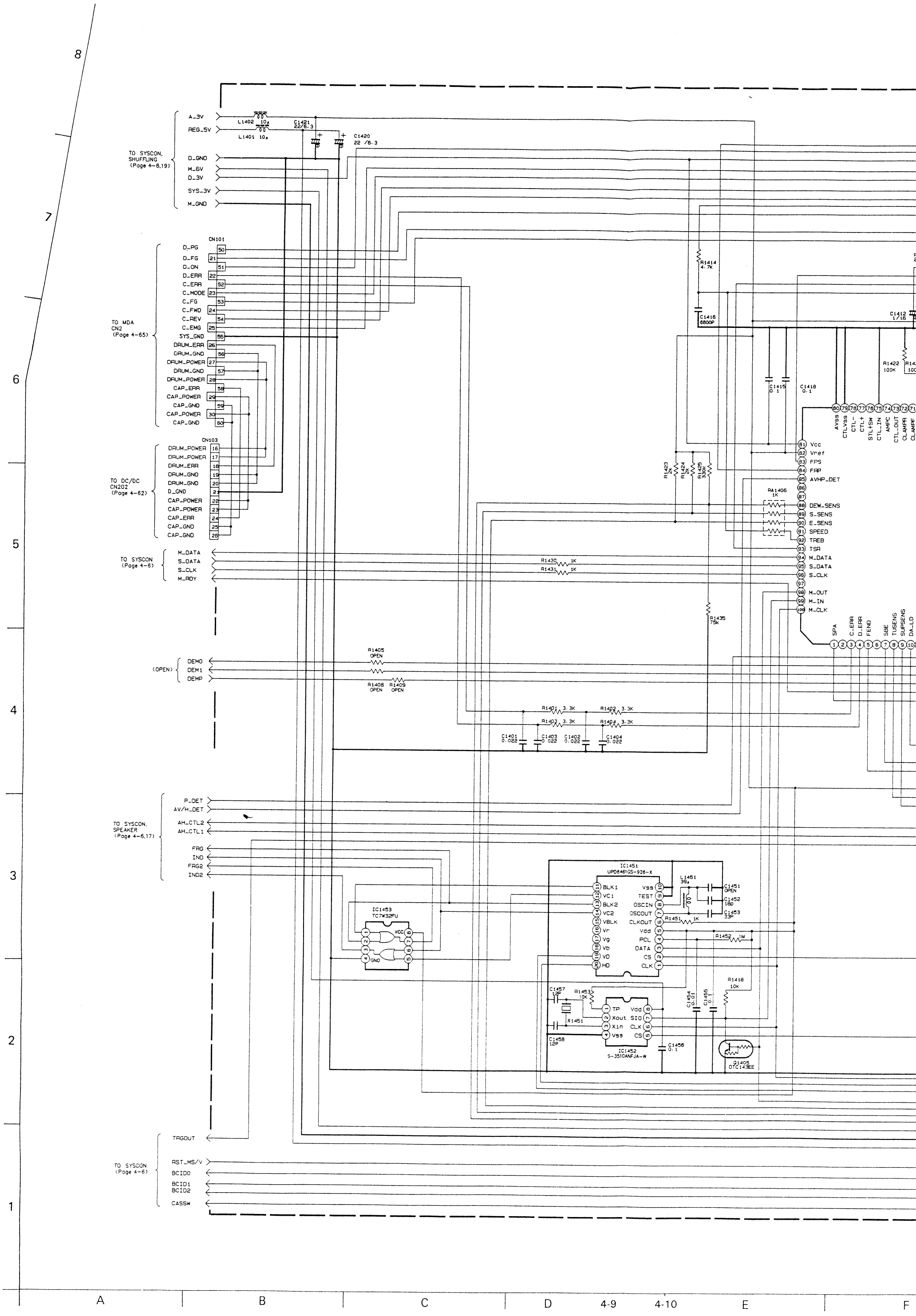

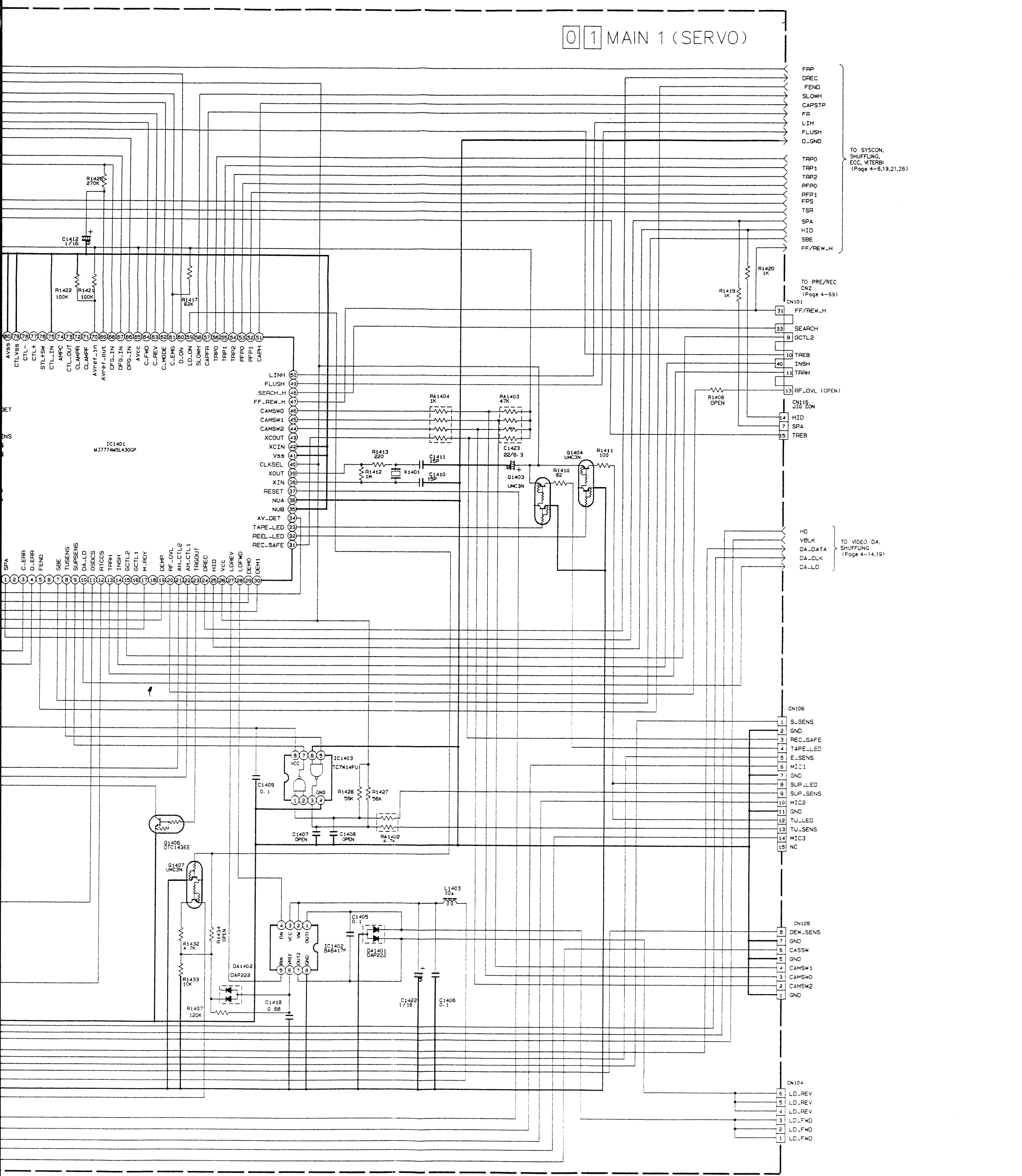

4.3 SERVO SCHEMATIC DIAGRAM

4.4 AUDIO PROCESS SCHEMATIC DIAGRAM

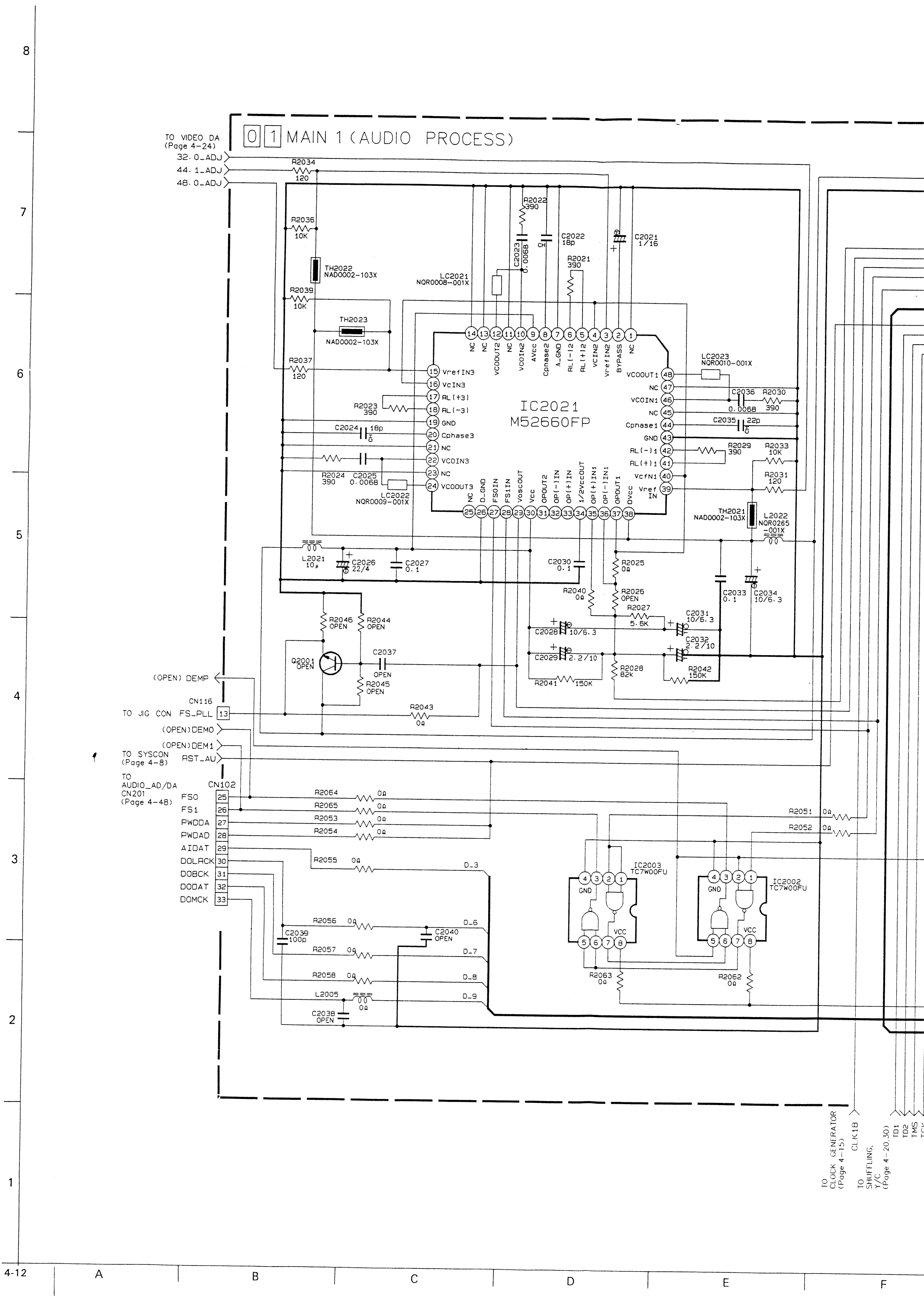

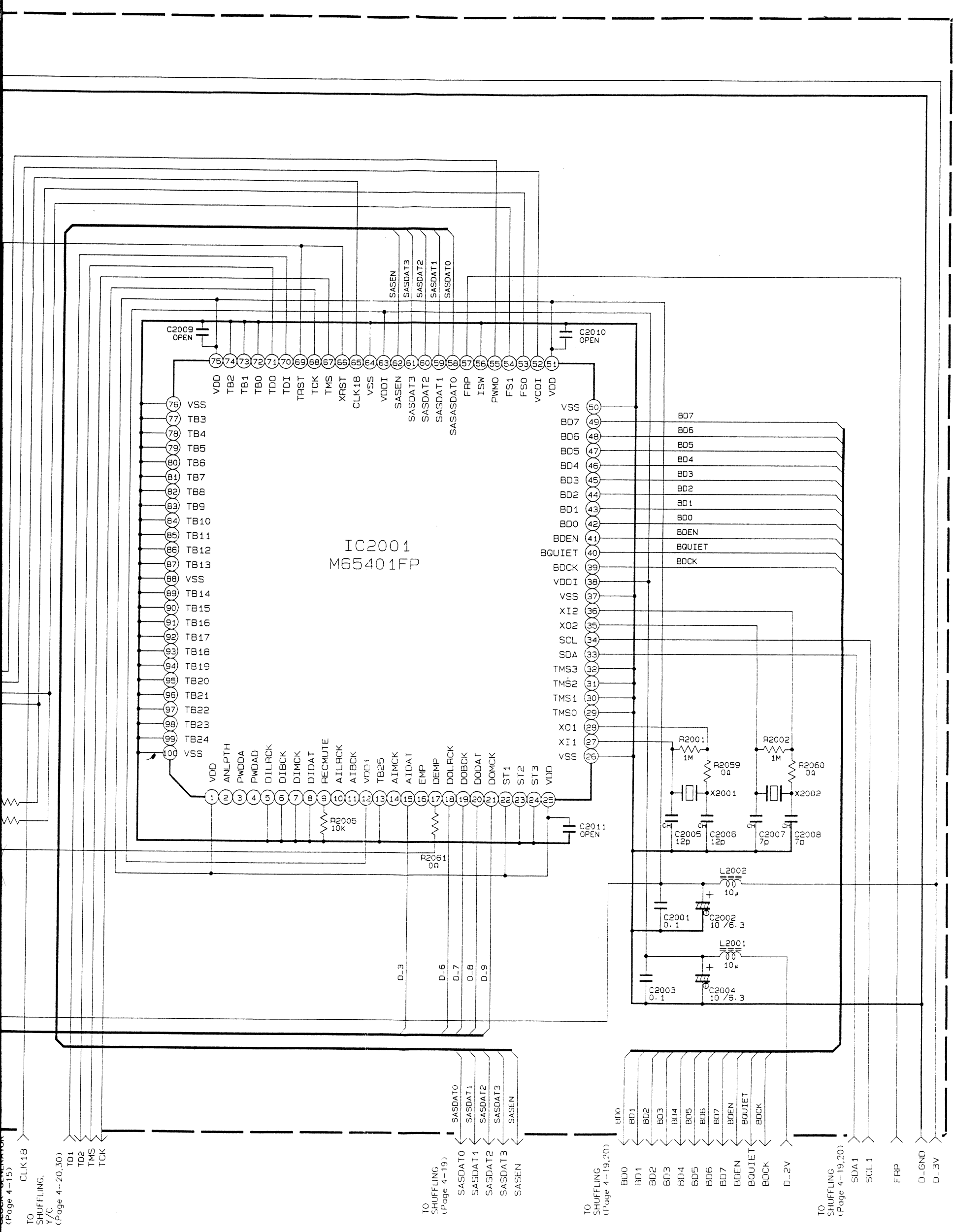

MC-Service

4.4 AUDIO PROCESS SCHEMATIC DIAGRAM

4.5 CLOCK GENERATOR SCHEMATIC DIAGRAM

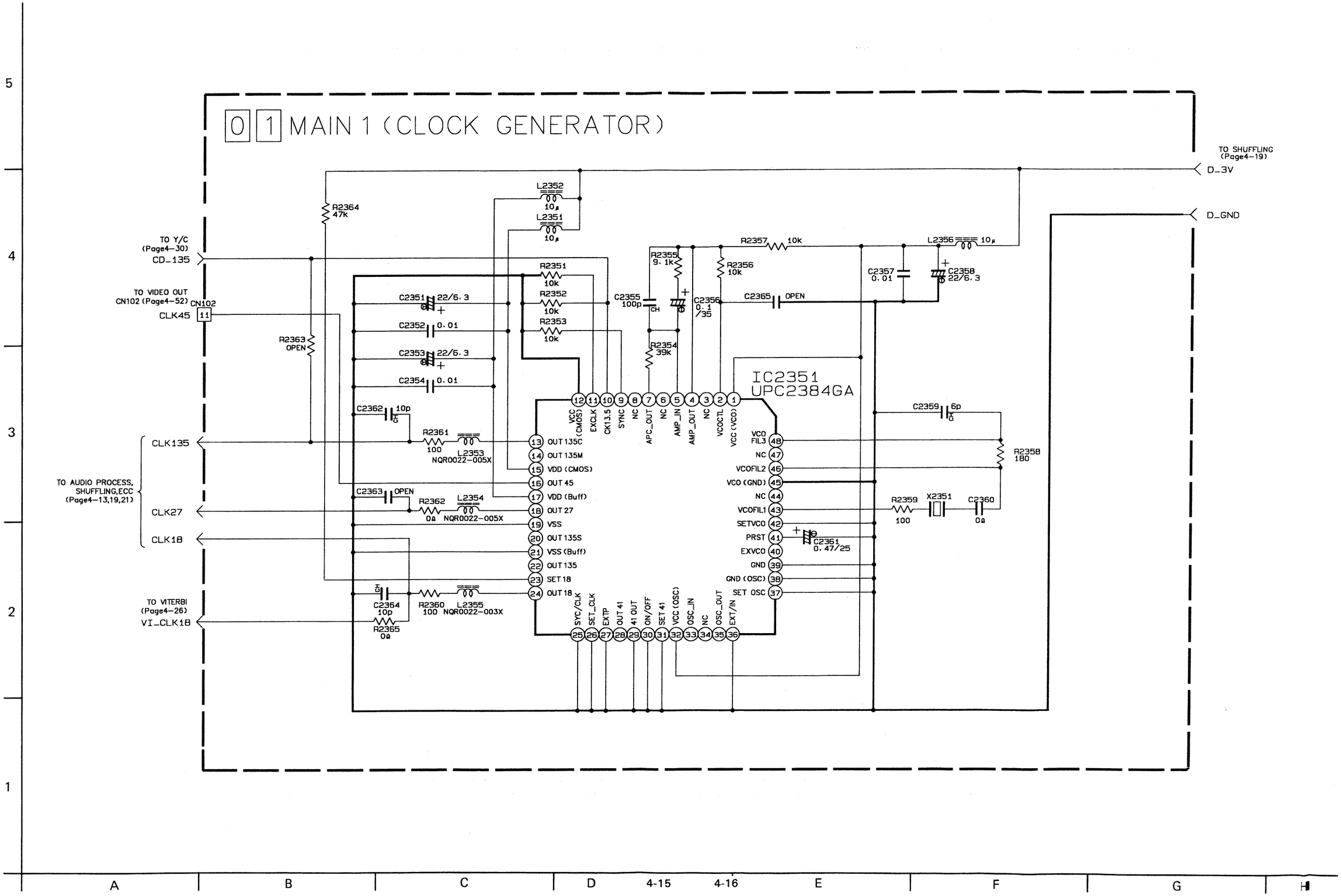

4.6 SPEAKER SCHEMATIC DIAGRAM

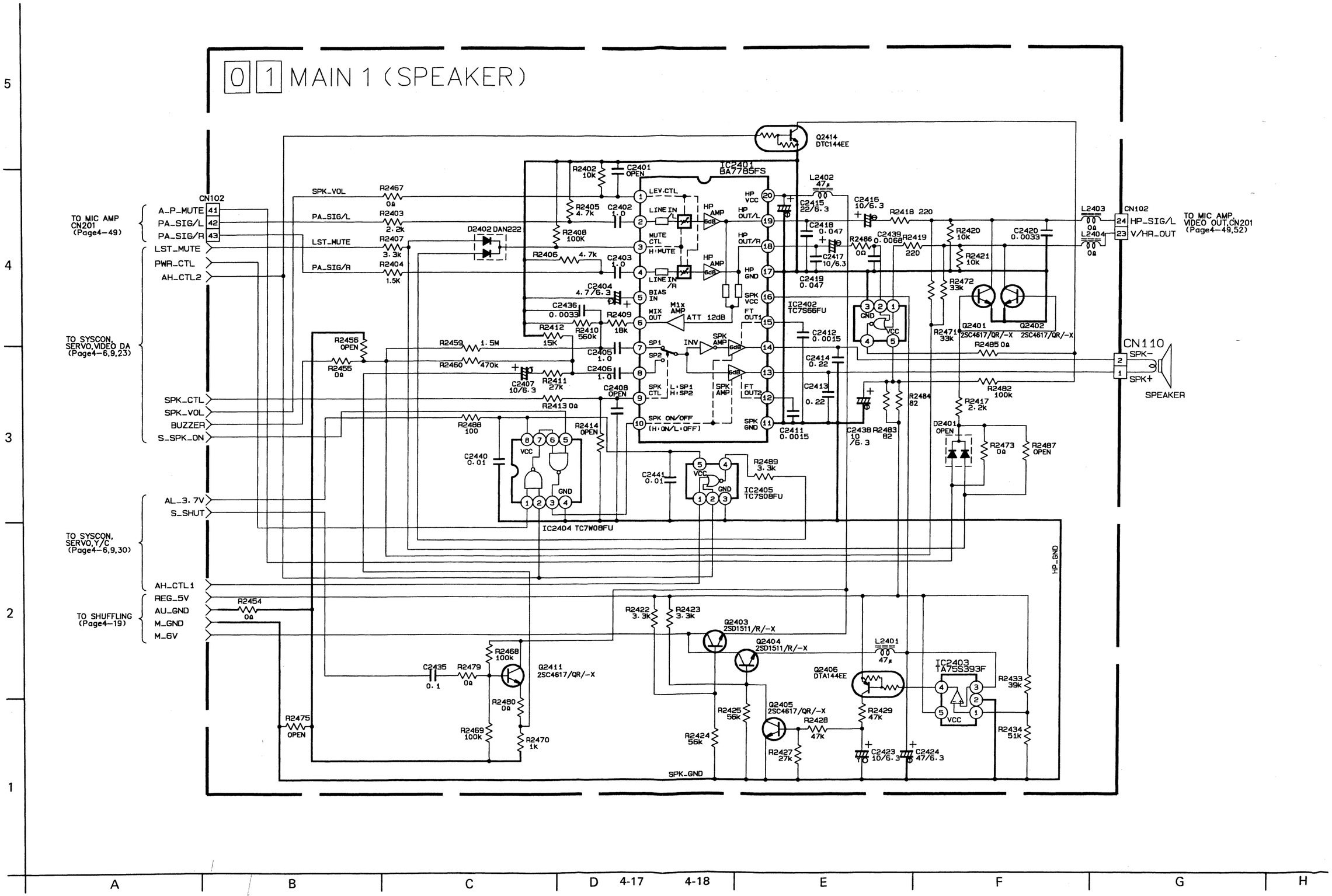

4.7 SHUFFLING SCHEMATIC DIAGRAM

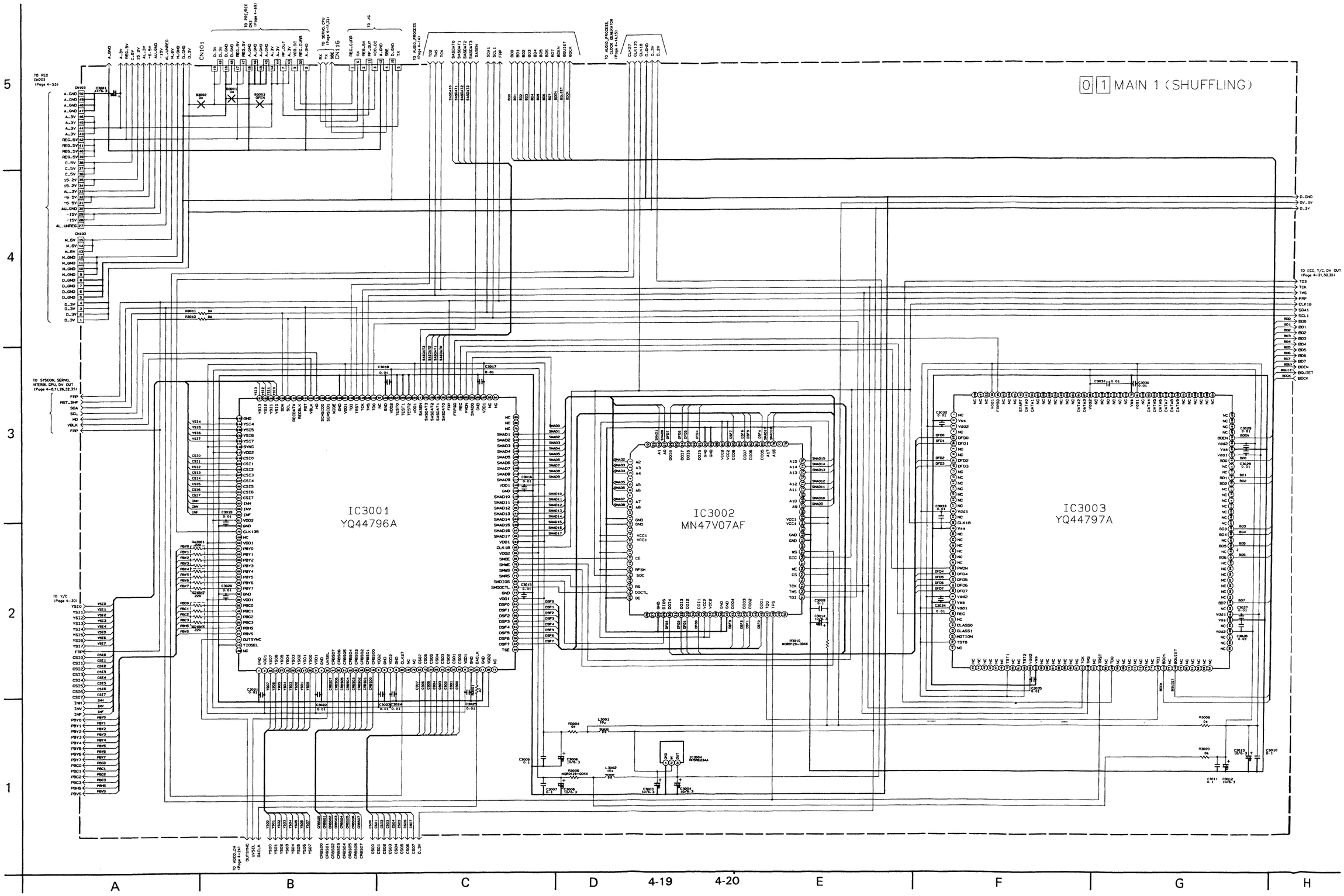

4.8 ECC SCHEMATIC DIAGRAM

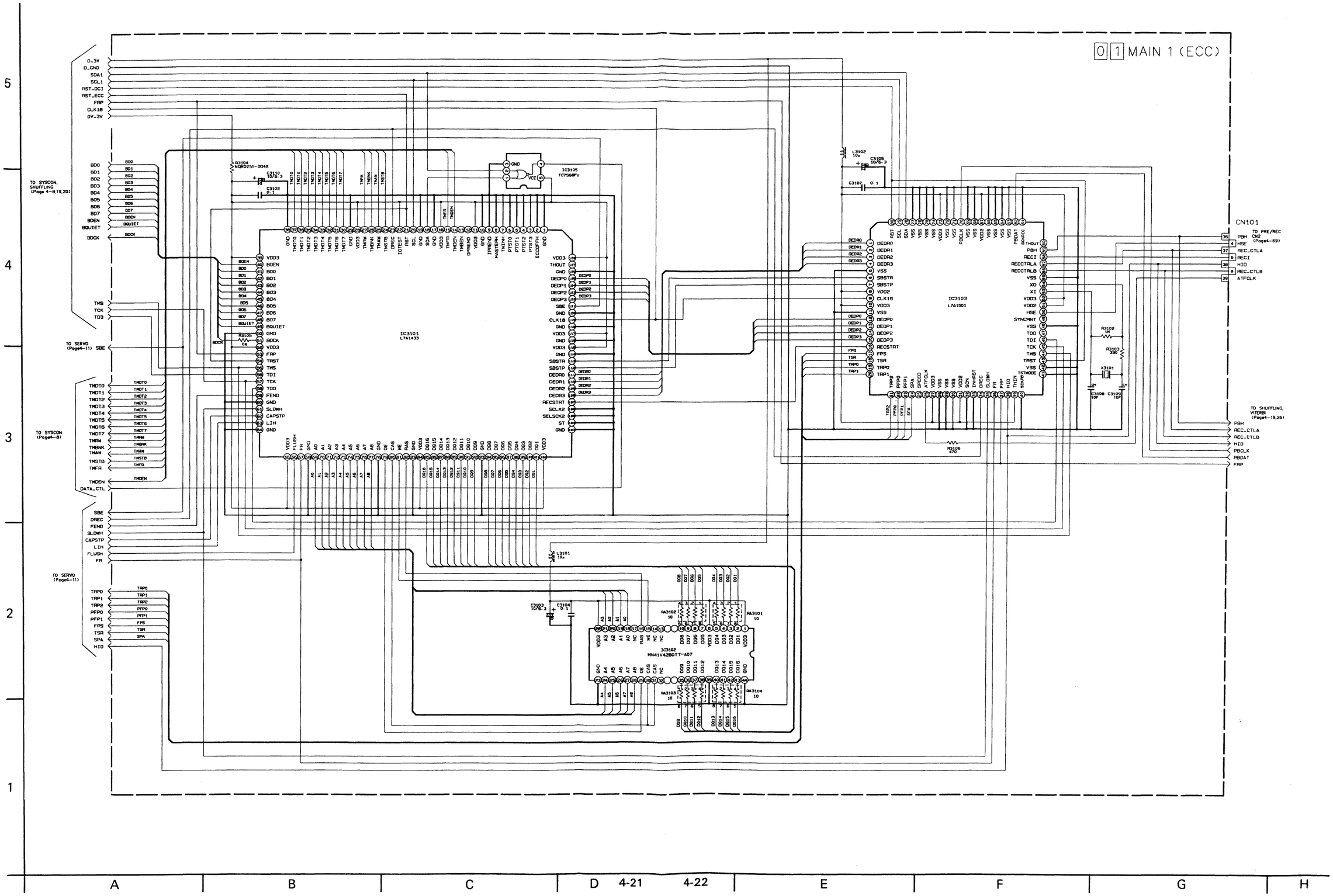

4.9 VIDEO DA SCHEMATIC DIAGRAM

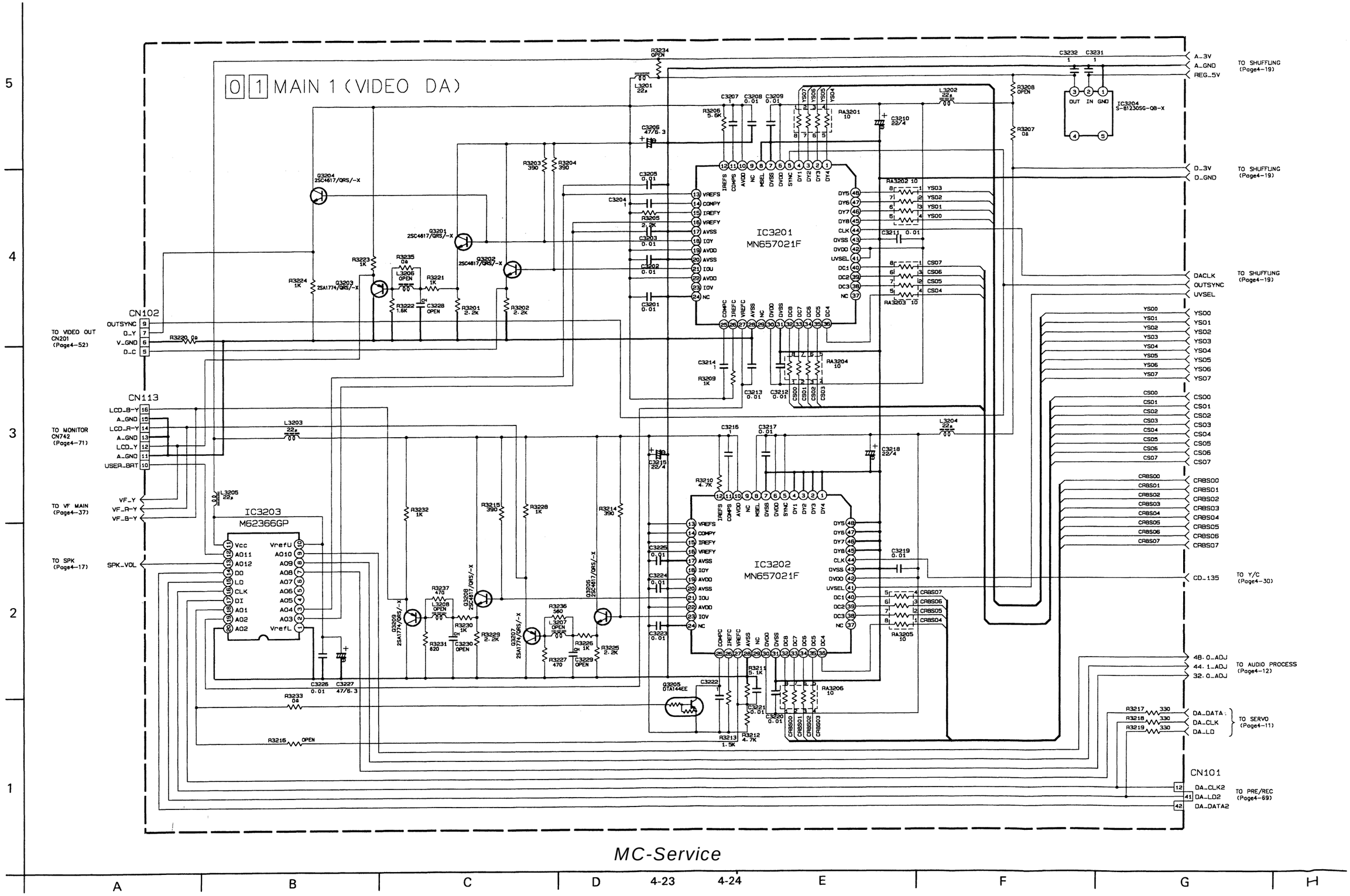

4.10 VITERBI SCHEMATIC DIAGRAM

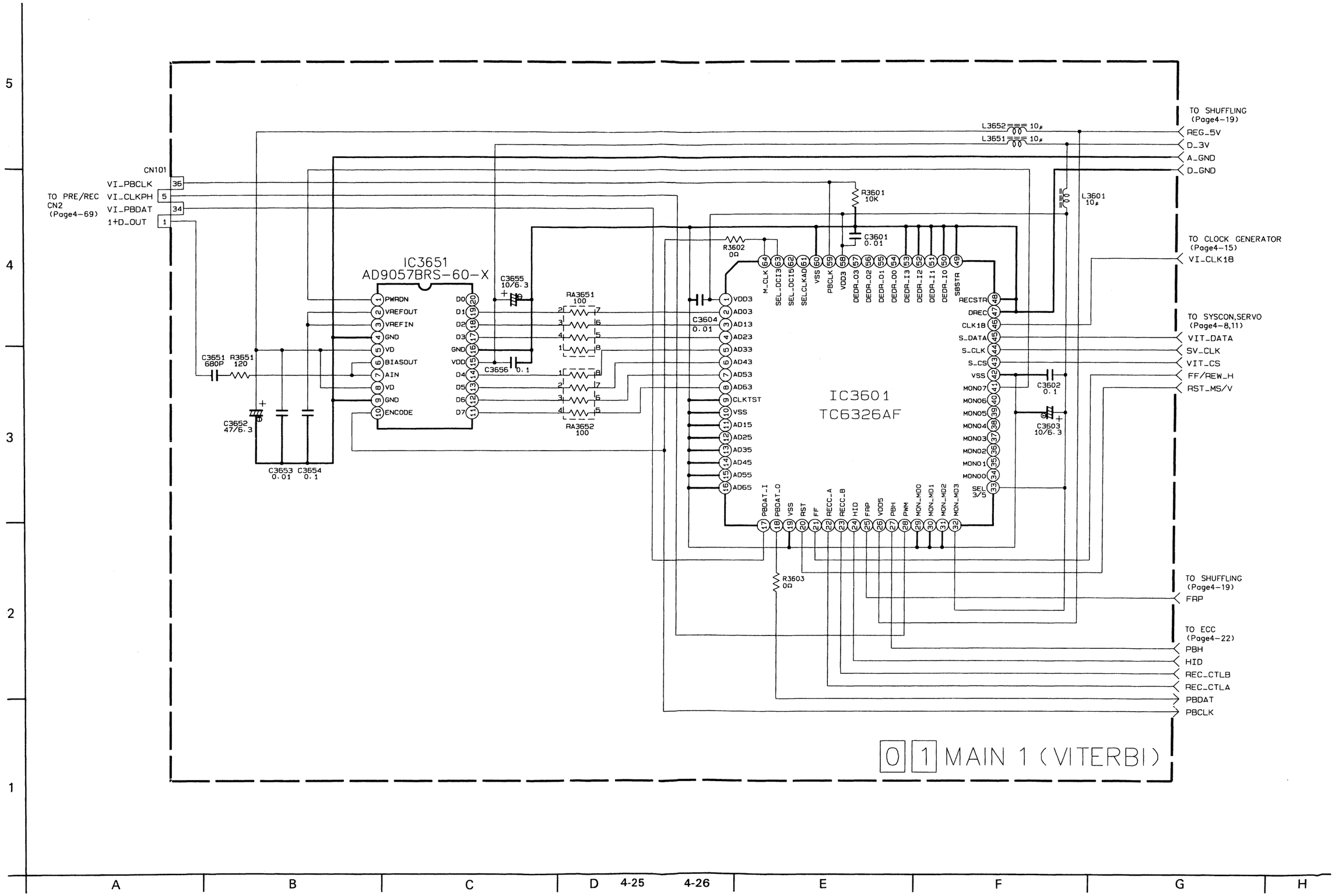

4.11 A/D SCHEMATIC DIAGRAM

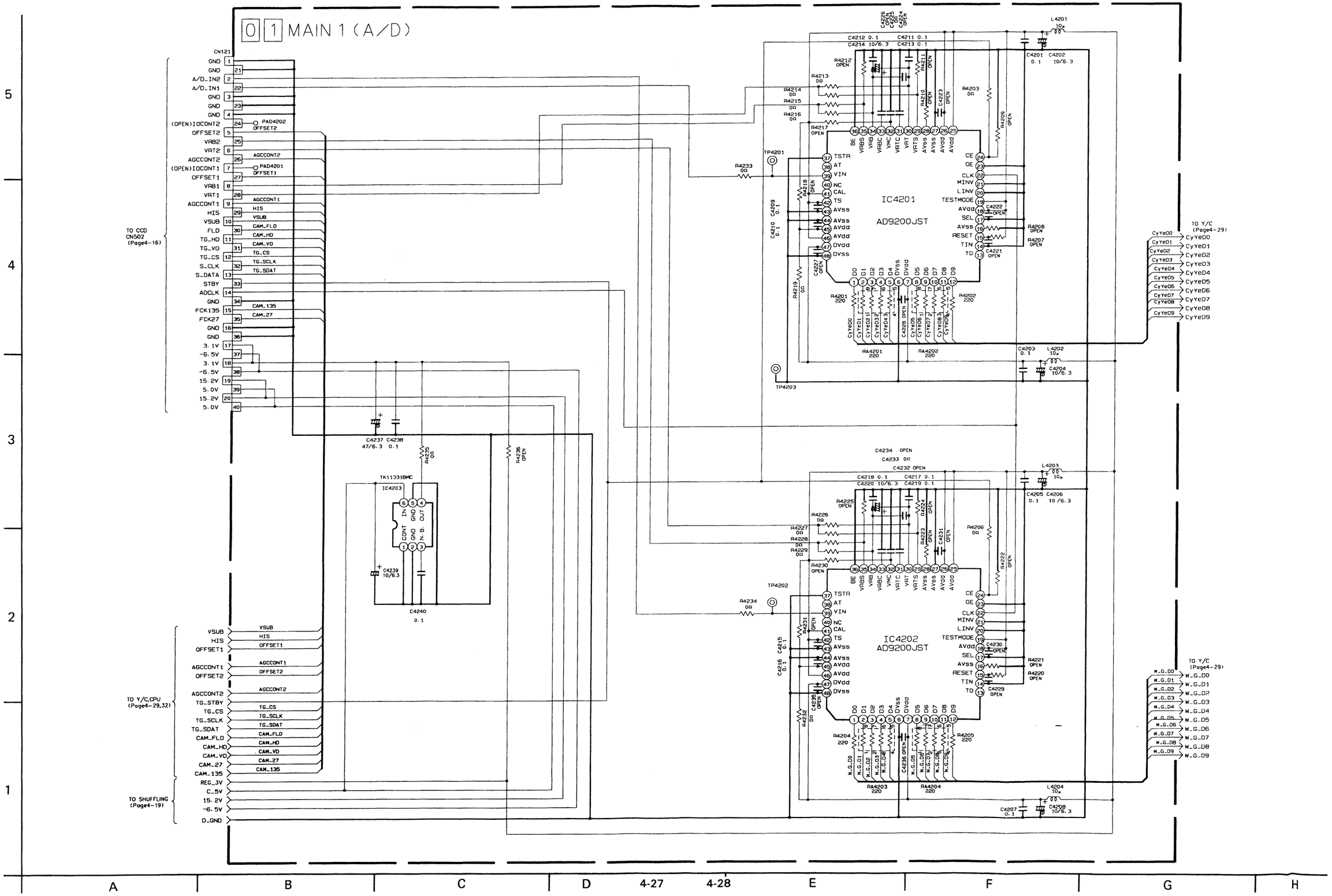

4.12 Y/C SCHEMATIC DIAGRAM

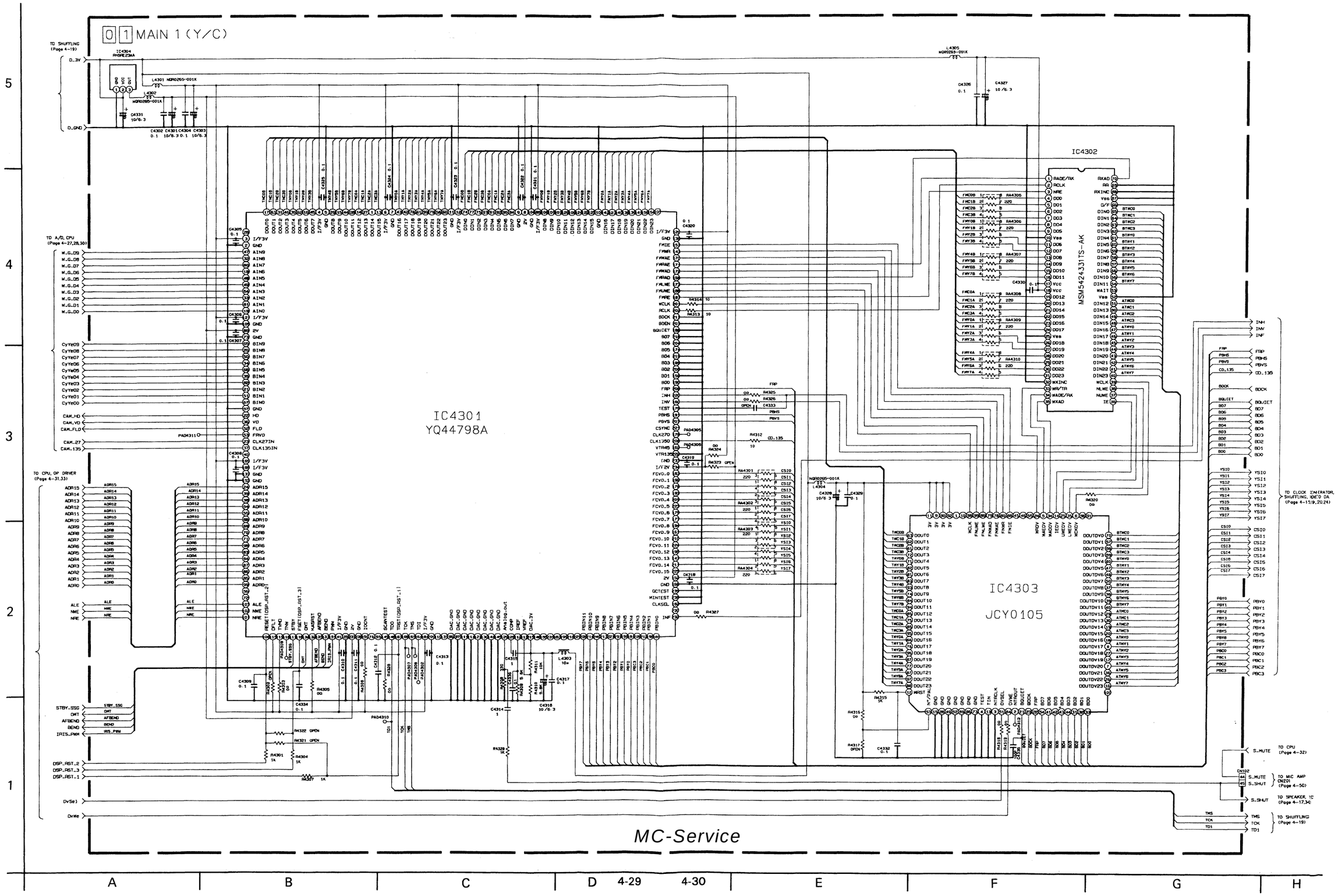

4.13 CPU SCHEMATIC DIAGRAM

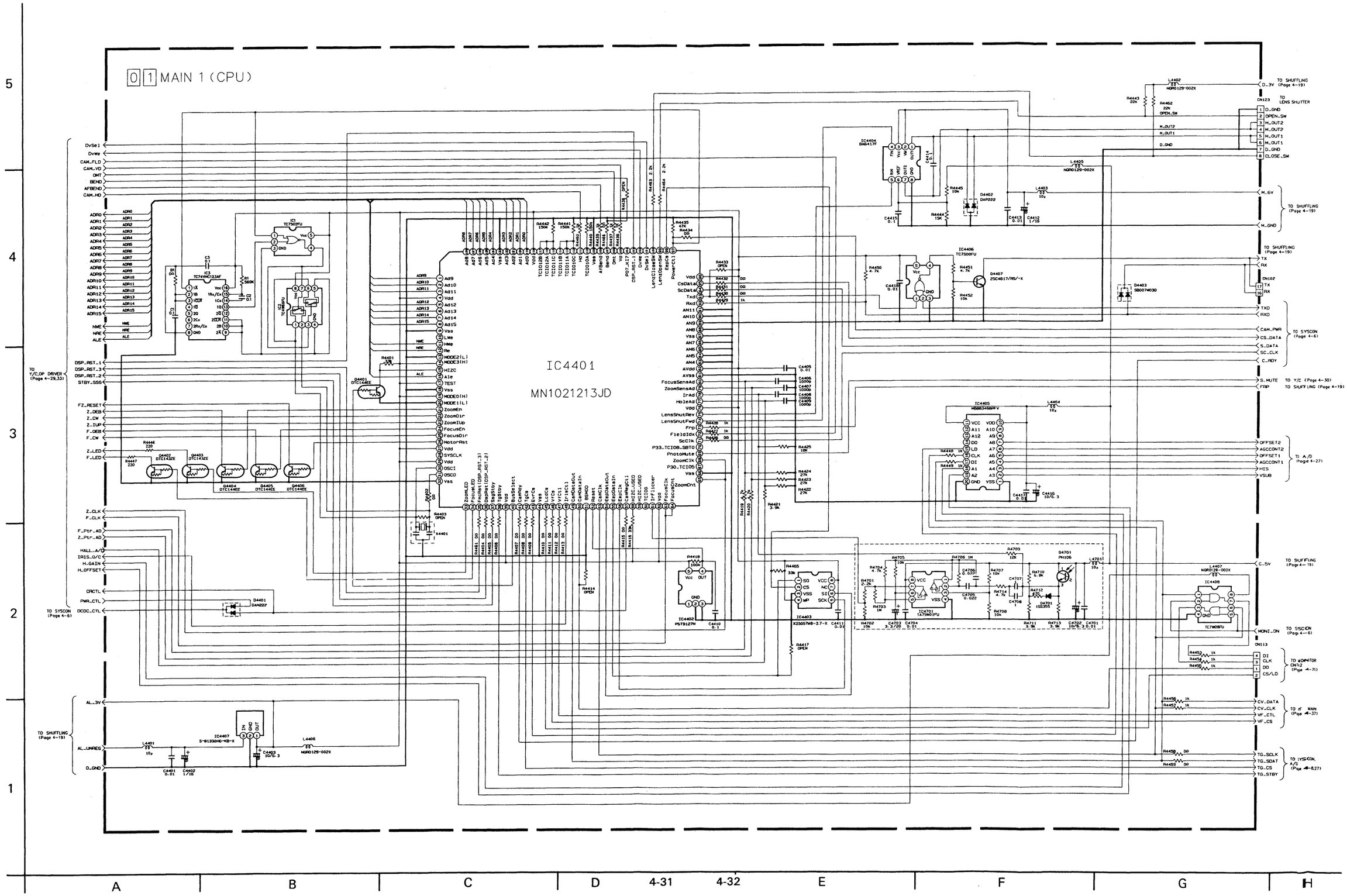

4.14 OP DRIVER SCHEMATIC DIAGRAM

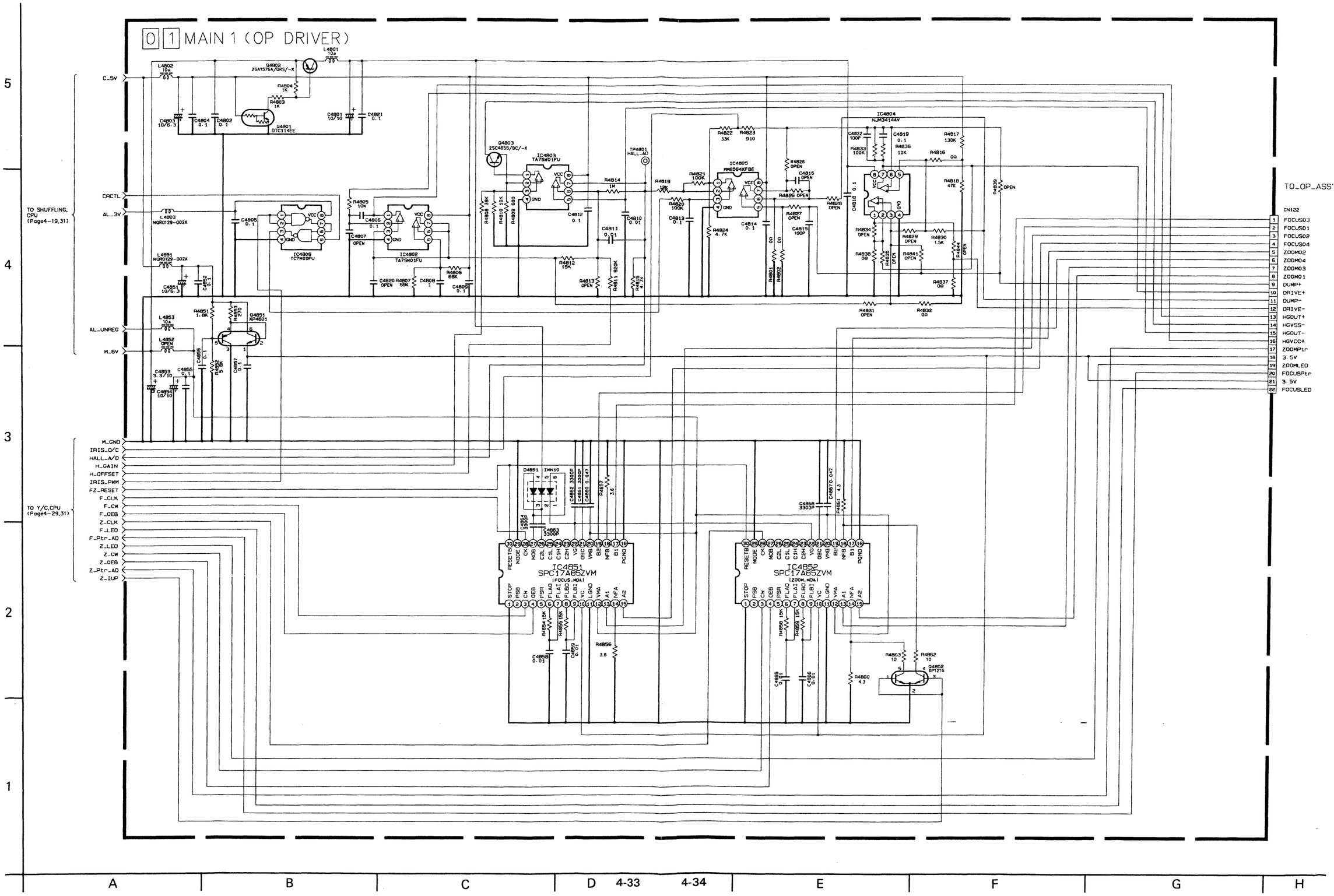

V20955/DRUCK8

4.15 DV OUT SCHEMATIC DIAGRAM

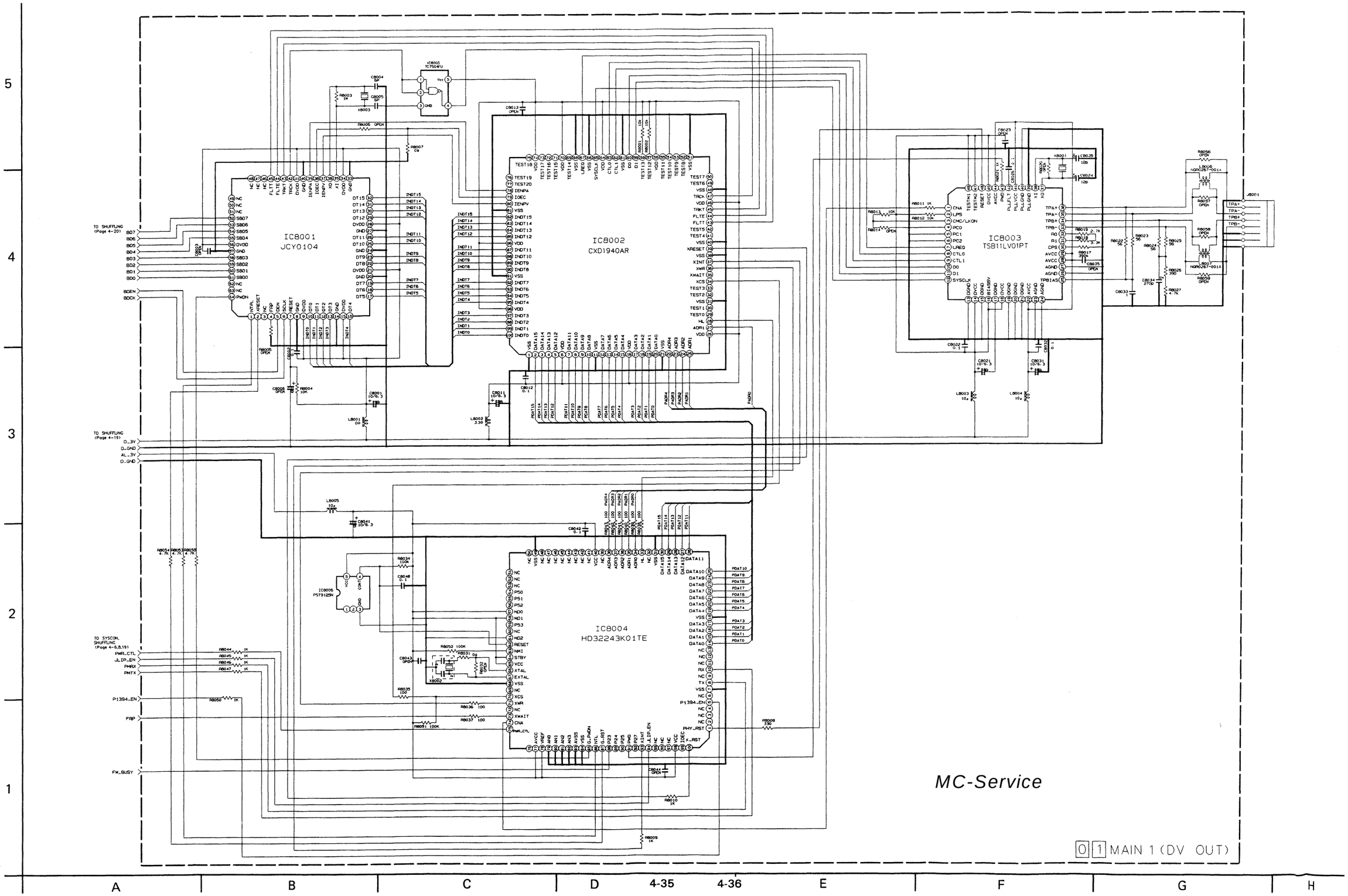

4.16 VF MAIN SCHEMATIC DIAGRAM

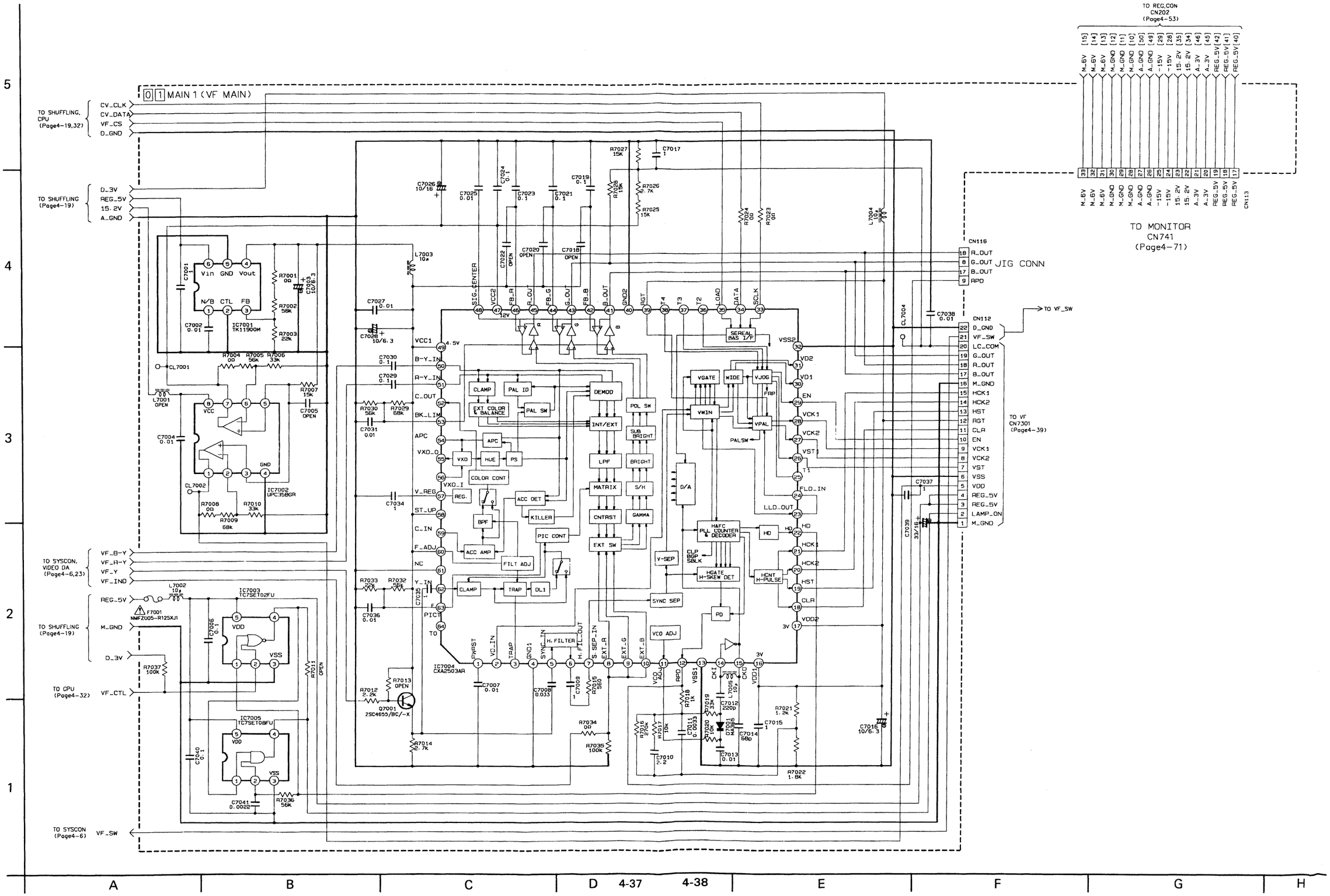

V20955/DRUCK1 0

4.17 VF SCHEMATIC DIAGRAM AND VF CIRCUIT BOARD

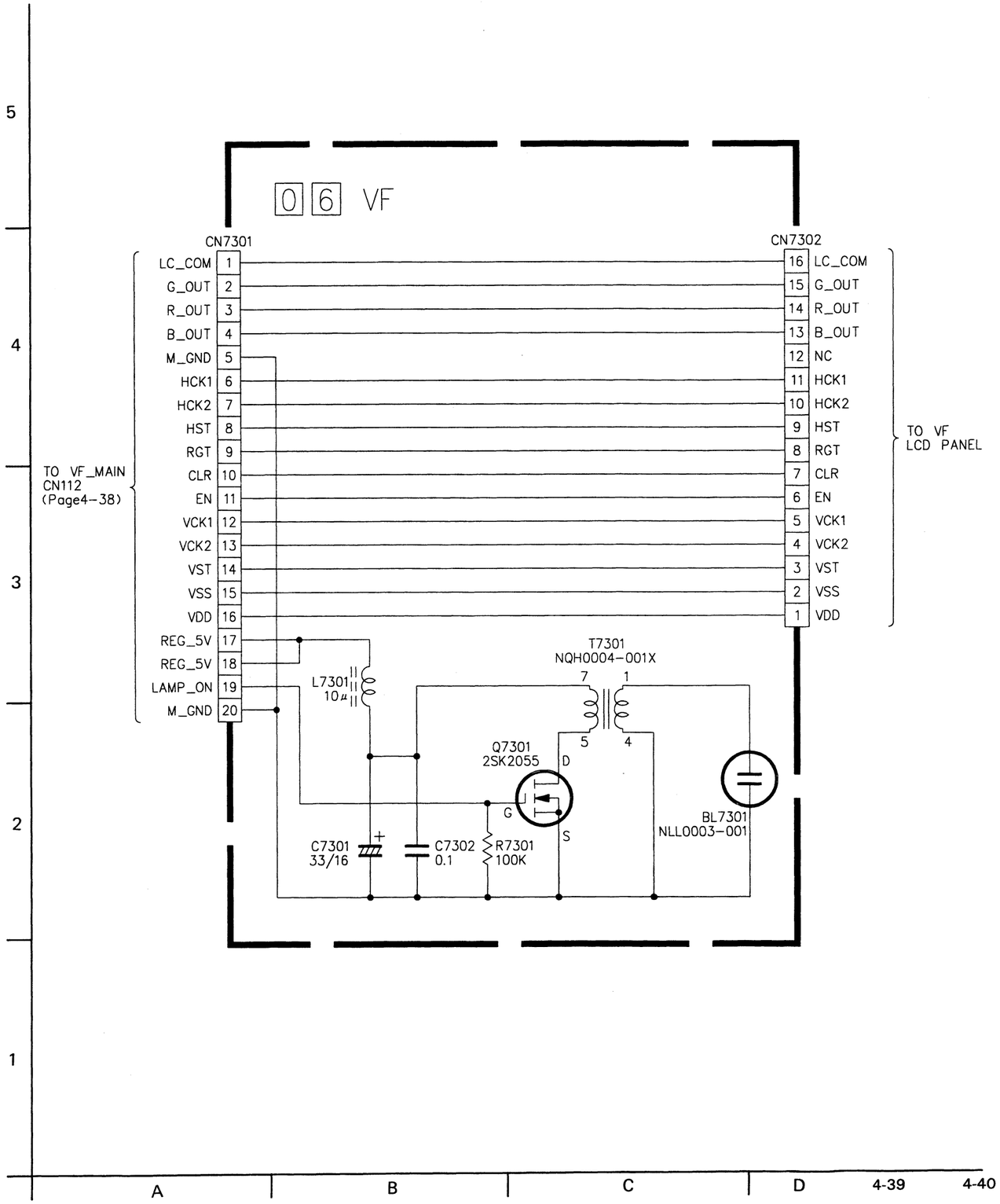

FOIL SIDE (B)

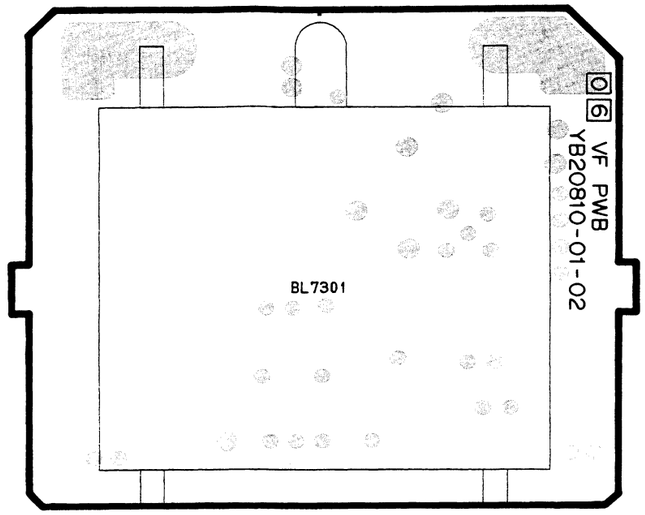

COMPONENT SIDE (A)

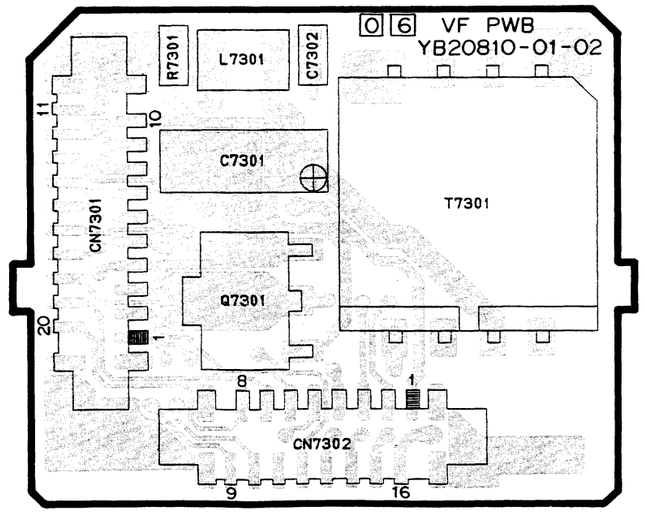

4.18 MAIN1 CIRCUIT BOARD AND POWER SAVE CIRCUIT BOARDS

FOIL SIDE (B)

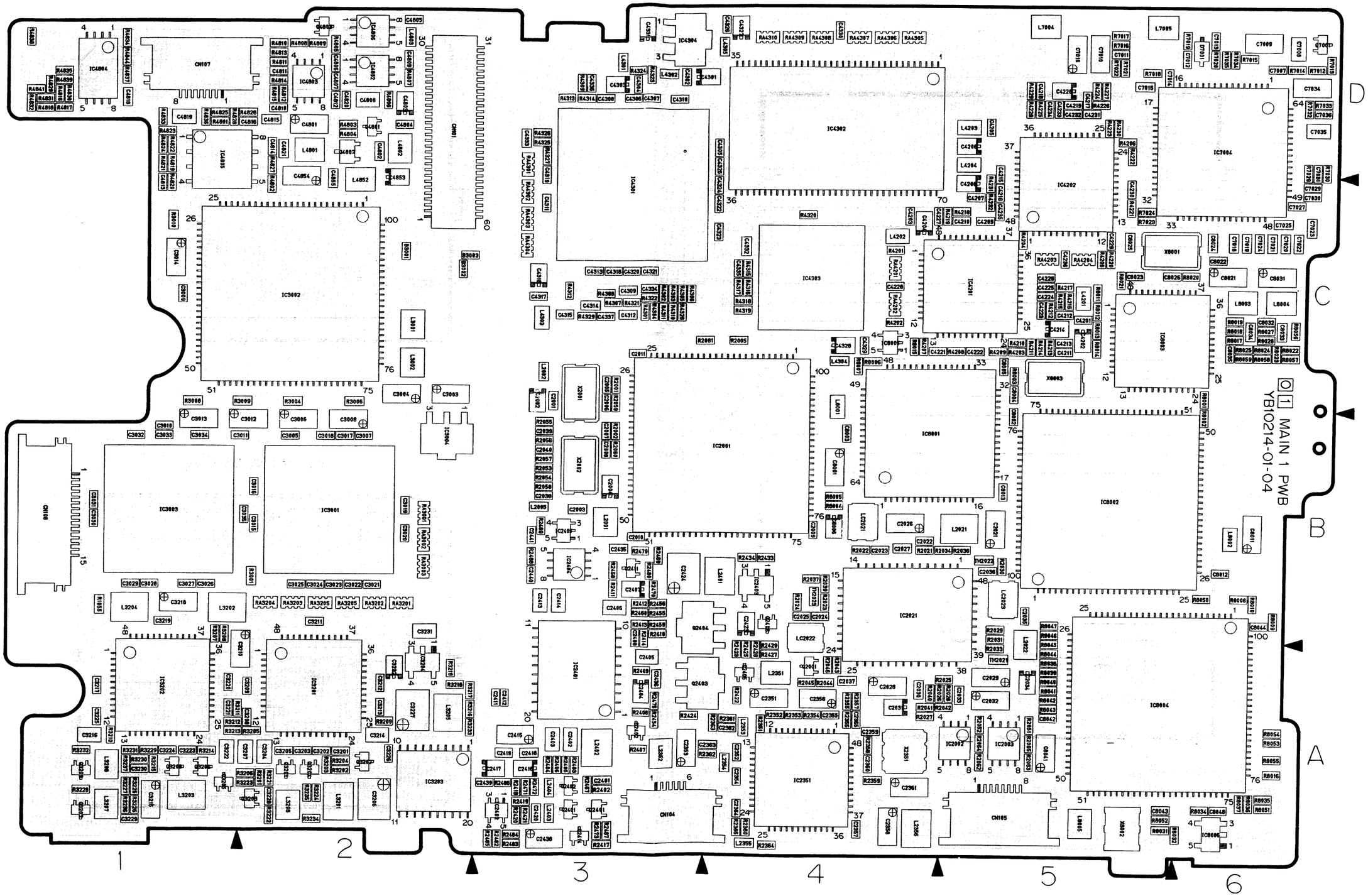

COMPONENT PARTS LOCATION GUIDE (MAIN1 PWB)

REF.No.	LOCATION		
CAPACITOR			
C1001	A	C	4A
C1002	A	C	3B
C1003	A	C	3B
C1004	A	C	2B
C1005	A	C	3A
C1006	A	C	3A
C1007	A	C	3A
C1008	A	C	3A
C1009	A	C	3A
C1010	A	C	3B
C1011	A	C	3B
C1012	A	C	3B
C1013	A	C	3B
C1014	A	C	2B
C1015	A	C	3B
C1017	A	C	4B
C1018	A	C	4B
C1019	A	C	4B
C1020	A	C	4A
C1021	A	C	4B
C1022	A	C	4A
C1023	A	C	4A
C1025	A	C	4B
C1026	A	C	4B
C1401	A	C	5B
C1402	A	C	5B
C1403	A	C	5B
C1404	A	C	5B
C1405	A	C	6A
C1406	A	C	5A
C1407	A	C	5B
C1408	A	C	5B
C1409	A	C	5B
C1410	A	C	5A
C1411	A	C	5A
C1412	A	C	4A
C1415	A	C	5B
C1416	A	C	5B
C1418	A	C	5B
C1419	A	C	5A
C1420	A	C	6B
C1421	A	C	4B
C1422	A	C	6A
C1423	A	C	5A
C1451	A	C	5B
C1452	A	C	5B
C1453	A	C	6B
C1454	A	C	6B
C1455	A	C	6B
C1456	A	C	6A
C1457	A	C	6A
C1458	A	C	6A
C2001	B	C	3C
C2002	B	C	3C
C2003	B	C	3B
C2004	B	C	3B
C2005	B	C	3C
C2006	B	C	3C
C2007	B	C	3B
C2008	B	C	3B
C2009	B	C	4B
C2010	B	C	3B
C2011	B	C	3C
C2021	B	C	5B
C2022	B	C	4B
C2023	B	C	4B
C2024	B	C	4B
C2025	B	C	4B
C2026	B	C	4B
C2027	B	C	4B
C2028	B	C	4A
C2029	B	C	5A
C2030	B	C	4A
C2031	B	C	4A
C2032	B	C	5A
C2033	B	C	5A
C2034	B	C	5A
C2035	B	C	5B
C2036	B	C	5B
C2037	B	C	4A
C2038	B	C	3B
C2039	B	C	3B
C2040	B	C	3B
C2351	B	C	4A
C2352	B	C	4A
C2353	B	C	3A
C2354	B	C	4A
C2355	B	C	4A
C2356	B	C	4A
C2357	B	C	4A
C2358	B	C	4A
C2359	B	C	4A
C2360	B	C	4A
C2361	B	C	4A
C2362	B	C	4A
C2363	B	C	4A
C2364	B	C	4A
C2365	B	C	4A
C2401	B	C	3A
C2402	B	C	3A
C2403	B	C	3A
C2404	B	C	3A
C2405	B	C	3A
C2406	B	C	3B
C2407	B	C	3B
C2408	B	C	3A
C2411	B	C	3A
C2412	B	C	3A
C2413	B	C	3B
C2414	B	C	3B
C2415	B	C	3A
C2416	B	C	3A
C2417	B	C	3A
C2418	B	C	3A
C2419	B	C	3A
C2420	B	C	3A
C2423	B	C	4B
C2424	B	C	3B
C2435	B	C	3B
C2436	B	C	3A
C2438	B	C	3A
C2439	B	C	3A
C2440	B	C	3B
C2441	B	C	3B
C3001	A	C	4A
C3003	B	C	2C
C3004	B	C	2C
C3005	B	C	2B
C3006	B	C	2B
C3007	B	C	2B
C3008	B	C	2B
C3009	B	C	1C
C3010	B	C	1B
C3011	B	C	1B
C3012	B	C	2B
C3013	B	C	1B
C3014	B	C	1C
C3015	B	C	2B
C3016	B	C	2B
C3017	B	C	2B
C3018	B	C	2B
C3019	B	C	2B
C3020	B	C	2B
C3021	B	C	2B
C3022	B	C	2B
C3023	B	C	2B
C3024	B	C	2B
C3025	B	C	2B
C3026	B	C	1B
C3027	B	C	1B
C3028	B	C	1B
C3029	B	C	1B
C3030	B	C	1B
C3031	B	C	1B
C3032	B	C	1B
C3033	B	C	1B
C3034	B	C	1B
C3035	B	C	2B
C3102	A	C	1A
C3103	A	C	1B
C3104	A	C	1B
C3106	A	C	1B
C3107	A	C	2B
C3108	A	C	2B
C3109	A	C	2B
C3110	A	C	1A
C3201	B	C	2A
C3202	B	C	2A
C3203	B	C	2A
C3204	B	C	2A
C3205	B	C	2A
C3206	B	C	2A
C3207	B	C	2A
C3208	B	C	2A
C3209	B	C	2A
C3210	B	C	2A
C3211	B	C	2B
C3212	B	C	2A
C3213	B	C	2A
C3214	B	C	2A
C3215	B	C	1A
C3216	B	C	1A
C3217	B	C	1A
C3218	B	C	1B
C3219	B	C	1B
C3220	B	C	1A
C3221	B	C	1A
C3222	B	C	1A
C3223	B	C	1A
C3224	B	C	1A
C3225	B	C	1A
C3226	B	C	2A
C3227	B	C	2A
C3228	B	C	2A
C3229	B	C	1A
C3230	B	C	1A
C3231	B	C	2B
C3232	B	C	2A
C3601	A	C	2C
C3602	A	C	2C
C3603	A	C	1C
C3604	A	C	2C
C3651	A	C	2C
C3652	A	C	3C
C3653	A	C	3C
C3654	A	C	2C
C3655	A	C	3C
C3656	A	C	2C
C4201	B	C	5C
C4202	B	C	5C
C4203	B	C	4C
C4204	B	C	4C
C4205	B	C	5D
C4206	B	C	5D
C4207	B	C	5C
C4208	B	C	5C
C4209	B	C	5C
C4210	B	C	5C
C4211	B	C	5C
C4212	B	C	5C
C4213	B	C	5C
C4214	B	C	5C
C4215	B	C	5D
C4216	B	C	5C
C4217	B	C	5D
C4218	B	C	5D
C4219	B	C	5D
C4220	B	C	5D
C4221	B	C	4C
C4222	B	C	5C
C4223	B	C	5C
C4224	B	C	5C
C4225	B	C	5C
C4226	B	C	5C
C4227	B	C	4C
C4228	B	C	4C
C4229	B	C	5C
C4230	B	C	5C
C4231	B	C	5D
C4232	B	C	5D
C4233	B	C	5D
C4234	B	C	5D
C4235	B	C	5C
C4236	B	C	5C
C4237	A	C	5C
C4238	A	C	5C
C4239	A	C	5C
C4240	A	C	5C
C4301	B	C	3D
C4302	B	C	3D
C4303	B	C	3D
C4304	B	C	3D
C4305	B	C	4D
C4306	B	C	3D
C4307	B	C	3D
C4308	B	C	3D
C4309	B	C	3C
C4310	B	C	3D
C4311	B	C	3C
C4312	B	C	3C
C4313	B	C	3C
C4314	B	C	3C
C4315	B	C	3C
C4316	B	C	3C
C4317	B	C	3C
C4318	B	C	3C
C4319	B	C	3C
C4320	B	C	3C
C4321	B	C	3C
C4322	B	C	4C
C4323	B	C	4C
C4324	B	C	4C
C4325	B	C	4D
C4326	B	C	4D
C4327	B	C	4D
C4328	B	C	4C
C4329	B	C	4C
C4330	B	C	4D
C4331	B	C	3D
C4332	B	C	4C
C4333	B	C	3D
C4334	B	C	3C
C4335	B	C	4C
C4336	B	C	3D
C4337	B	C	3C
C4401	A	C	4C
C4402	A	C	4C
C4403	A	C	4C
C4405	A	C	3C
C4406	A	C	3C
C4407	A	C	3C
C4408	A	C	3C
C4409	A	C	3C
C4410	A	C	4C
C4411	A	C	4C
C4412	A	C	1A
C4413	A	C	1A
C4414	A	C	1A
C4415	A	C	1A
C4416	A	C	4D
C4417	A	C	4C
C4418	A	C	3D
C4701	A	C	1D
C4702	A	C	1D
C4703	A	C	1D
C4704	A	C	1D
C4705	A	C	1D
C4706	A	C	1D
C4707	A	C	1D
C4708	A	C	1D
C4801	B	C	2D
C4802	B	C	2D
C4803	B	C	2D
C4804	B	C	2D
C4805	B	C	2D
C4806	B	C	2D
C4807	B	C	2D
C4808	B	C	2D
C4809	B	C	2D
C4810	B	C	2D
C4811	B	C	2D
C4812	B	C	2D
C4813	B	C	1C
C4814	B	C	2D
C4815	B	C	2D
C4816	B	C	2D
C4818	B	C	1D
C4819	B	C	1D
C4820	B	C	2D
C4821	B	C	2D
C4851	A	C	2C
C4852	A	C	2C
C4853	B	C	2C
C4854	B	C	2C
C4855	B	C	2C
C4856	A	C	2C
C4857	A	C	2C
C4858	A	C	1D
C4859	A	C	1C
C4860	A	C	2D
C4861	A	C	2D
C4862	A	C	2D
C4863	A	C	2D
C4864	A	C	2D
C4865	A	C	2D
C4866	A	C	2D
C4867	A	C	3D
C4868	A	C	3D
C7001	A	C	5C
C7002	A	C	5C
C7003	A	C	5C
C7004	A	C	5C
C7005	A	C	5D
C7006	A	C	5D
C7007	B	C	6D
C7008	B	C	6D
C7009	B	C	6D
C7010	B	C	5D
C7011	B	C	5D
C7012	B	C	6D
C7013	B	C	6D
C7014	B	C	5D
C7015	B	C	5D
C7016	B	C	5D
C7017	A	C	6D
C7018	B	C	6C
C7019	B	C	6C
C7020	B	C	6C
C7021	B	C	6C
C7022	B	C	6C
C7023	B	C	6C
C7024	B	C	6C
C7025	B	C	6C
C7026	A	C	5C
C7027	B	C	6C
C7028	A	C	5C
C7029	B	C	6C
C7030	B	C	6C
C7031	B	C	6D
C7034	B	C	6D
C7035	B	C	6D
C7036	B	C	6D
C7037	A	C	5D
C7038	A	C	5D
C7039	A	C	5C
C7040	A	C	6D
C7041	A	C	6D
C8001	B	C	4B
C8002	B	C	5B
C8003	B	C	4B
C8004	B	C	5C
C8005	B	C	5C
C8006	B	C	4B
C8011	B	C	6B
C8012	B	C	6B
C8013	B	C	5B
C8021	B	C	6C
C8022	B	C	6C
C8023	B	C	5C
C8024	B	C	6C
C8025	B	C	5C
C8026	B	C	5C
C8031	B	C	6C
C8032	B	C	6C
C8033	B	C	6C
C8034	B	C	6C
C8035	B	C	6C
C8041	B	C	5A
C8042	B	C	5A
C8043	B	C	5A
C8044	B	C	6B
C8048	B	C	6A
CF1001	A	C	3B
CL7001	A	C	5C
CL7002	A	C	5D
CL7004	A	C	5D
CONNECTOR			
CN101	B	C	2C
CN102	A	C	3A
CN103	A	C	5A
CN104	B	C	3A
CN105	B	C	5A
CN106	A	C	6D
CN107	B	C	1D
CN108	B	C	1B
CN109	A	C	4D
CN110	A	C	3D
CN112	A	C	4D
CN113	A	C	1B
CN116	A	C	6C
CN121	A	C	5C
CN122	A	C	1D
CN123	A	C	1A
DIODE			
D1001	A	C	3B
D1002	A	C	2A
D1003	A	C	3B
D1004	A	C	3B
D1005	A	C	3B
D1006	A	C	4B
D1009	A	C	3B
D2401	B	C	3A
D2402	B	C	3A
D4401	A	C	3C
D4402	A	C	1A
D4403	A	C	3D
D4701	A	C	1D
D4851	A	C	2C
D7001	B	C	6D
DA1401	A	C	6A
DA1402	A	C	6A
IC			
IC1001	A	C	3A
IC1002	A	C	3B
IC1003	A	C	4B
IC1004	A	C	3B
IC1005	A	C	4A
IC1006	A	C	4B
IC1008	A	C	4B
IC1009	A	C	4A
IC1010	A	C	4B
IC1011	A	C	4B
IC1012	A	C	4A
IC1013	A	C	4B
IC1014	A	C	4A
IC1015	A	C	4B
IC1401	A	C	5B
IC1402	A	C	5A
IC1403	A	C	5B
IC1451	A	C	6B
IC1452	A	C	6A
IC1453	A	C	6B
IC2001	B	C	4B
IC2002	B	C	5A
IC2003	B	C	5A
IC2021	B	C	4B
IC2351	B	C	4A
IC2401	B	C	3A
IC2402	B	C	3A
IC2403	B	C	4B
IC2404	B	C	3B
IC2405	B	C	3B
IC3001	B	C	2B
IC3002	B	C	2C
IC3003	B	C	1B
IC3004	B	C	2B
IC3101	A	C	2A
IC3102	A	C	1B
IC3103	A	C	2B
IC3105	A	C	2A
IC3201	B	C	2A
IC3202	B	C	1A
IC3203	B	C	2A
IC3204	B	C	2A
IC3601	A	C	2C
IC3651	A	C	2C
IC4201	B	C	5C
IC4202	B	C	5C
IC4203	A	C	5C
IC4301	B	C	3C
IC4302	B	C	4D
IC4303	B	C	4C
IC4304	B	C	3D
IC4401	A	C	3C
IC4402	A	C	4C
IC4403	A	C	4C
IC4404	A	C	1A
IC4405	A	C	4D
IC4406	A	C	3D
IC4407	A	C	4C
IC4408	A	C	4C
IC4701	A	C	1D
IC4802	B	C	2D
IC4803	B	C	2D
IC4804	B	C	1D
IC4805	B	C	1D
IC4806	B	C	2D
IC4851	A	C	2D
IC4852	A	C	2D
IC7001	A	C	5C
IC7002	A	C	5D
IC7003	A	C	5D
IC7004	B	C	6D
IC7005	A	C	6D
IC8001	B	C	4B
IC8002	B	C	5B
IC8003	B	C	5C
IC8004	B	C	5A
IC8005	B	C	4C
IC8006	B	C	6A
COIL			
L1001	A	C	4A
L1401	A	C	5A
L1402	A	C	4B
L1403	A	C	6A
L1451	A	C	5B
L2001	B	C	3B
L2002	B	C	3C
L2005	B	C	3B
L2021	B	C	5B
L2022	B	C	5A
L2351	B	C	4A
L2352	B	C	3A
L2353	B	C	4A
L2354	B	C	4A
L2355	B	C	4A
L2356	B	C	4A
L2401	B	C	4B
L2402	B	C	3A
L2403	B	C	3A
L2404	B	C	3A
L3001	B	C	2C
L3002	B	C	2C
L3101	A	C	1B
L3102	A	C	1C
L3201	B	C	2A
L3202	B	C	1B
L3203	B	C	1A
L3204	B	C	1B
L3205	B	C	2A
L3206	B	C	2A
L3207	B	C	1A
L3208	B	C	1A
L3601	A	C	1C
L3651	A	C	3C
L3652	A	C	3C
L4201	B	C	5C
L4202	B	C	4C
L4203	B	C	5D
L4204	B	C	5D
L4301	B	C	3D
L4302	B	C	3D
L4303	B	C	3C
L4304	B	C	4C
L4305	B	C	4D
L4401	A	C	4C
L4402	A	C	1A
L4403	A	C	1A
L4404	A	C	4D
L4405	A	C	1A
L4406	A	C	4C
L4407	A	C	4C
L4701	A	C	1D
L4801	B	C	2D
L4802	B	C	2D
L4803	B	C	2D
L4851	A	C	2C
L4852	B	C	2C
L4853	A	C	1C
L7002	A	C	6D
L7003	A	C	5C
L7004	B	C	5D
L7005	B	C	5D
L8001	B	C	4C
L8002	B	C	6B
L8003	B	C	6C
L8004	B	C	6C
L8005	B	C	5A
L8006	A	C	5C
L8007	A	C	6C
TRANSISTOR			
Q1001	A	C	3B
Q1002	A	C	3B
Q1003	A	C	3B
Q1005	A	C	4B
Q1006	A	C	4B
Q1007	A	C	4B
Q1008	A	C	4B
Q1009	A	C	4B
Q1010	A	C	4B
Q1403	A	C	5A
Q1404	A	C	5A
Q1405	A	C	6A
Q1406	A	C	4A
Q1407	A	C	6A
Q2001	B	C	4A
Q2401	B	C	3A
Q2402	B	C	3A
Q2403	B	C	3A
Q2404	B	C	3B
Q2405	B	C	4A
Q2406	B	C	4B
Q2411	B	C	3B
Q2414	B	C	3A
Q3201	B	C	2A
Q3202	B	C	2A
Q3203	B	C	2A
Q3204	B	C	2A
Q3205	B	C	1A
Q3206	B	C	1A
Q3207	B	C	1A
Q3208	B	C	1A
Q3209	B	C	1A
Q4401	A	C	4C
Q4402	A	C	3D
Q4403	A	C	3D
Q4404	A	C	3D
Q4405	A	C	3D
Q4406	A	C	3D
Q4407	A	C	3D
Q4701	A	D	1D
Q4801	B	C	2D
Q4802	B	C	2D
Q4803	B	C	2D
Q4851	A	C	2C
Q4852	A	C	2D
Q7001	B	C	6D
RESISTOR			
R1001	A	C	3B
R1002	A	C	3B

REF.No.	LOCATION			REF.No.	LOCATION			REF.No.	LOCATION			REF.No.	LOCATION			REF.No.	LOCATION			REF.No.	LOCATION			REF.No.	LOCATION		
R1003	A	C	2B	R1431	A	C	4B	R2459	B	C	3B	R4219	B	C	4C	R4448	A	C	4D	R7008	A	C	5D	RA3001	B	C	2B
R1004	A	C	2B	R1432	A	C	6A	R2460	B	C	3B	R4220	B	C	5C	R4449	A	C	4D	R7009	A	C	5D	RA3002	B	C	2B
R1005	A	C	2B	R1433	A	C	6A	R2467	B	C	3A	R4221	B	C	5C	R4450	A	C	3D	R7010	A	C	5D	RA3003	B	C	2B
R1006	A	C	2A	R1434	A	C	5A	R2468	B	C	3B	R4222	B	C	5D	R4451	A	C	3D	R7011	A	C	5D	RA3101	A	C	2B
R1007	A	C	2A	R1435	A	C	5B	R2469	B	C	3B	R4223	B	C	5D	R4452	A	C	3D	R7012	B	C	6D	RA3102	A	C	2B
R1008	A	C	2A	R1451	A	C	6B	R2470	B	C	3B	R4224	B	C	5D	R4453	A	C	3C	R7013	B	C	6D	RA3103	A	C	1B
R1009	A	C	2A	R1452	A	C	6B	R2471	B	C	3A	R4225	B	C	5D	R4454	A	C	4B	R7014	B	C	6D	RA3104	A	C	1B
R1010	A	C	2A	R1453	A	C	6A	R2472	B	C	3A	R4226	B	C	5D	R4455	A	C	3C	R7015	B	C	6D	RA3201	B	C	2B
R1011	A	C	3A	R2001	B	C	3C	R2473	B	C	3A	R4227	B	C	5D	R4456	A	C	4C	R7016	B	C	5D	RA3202	B	C	2B
R1012	A	C	3A	R2002	B	C	3B	R2475	B	C	3A	R4228	B	C	5D	R4457	A	C	4C	R7017	B	C	5D	RA3203	B	C	2B
R1013	A	C	3A	R2005	B	C	4C	R2479	B	C	3B	R4229	B	C	5D	R4458	A	C	4C	R7018	B	C	5D	RA3204	B	C	2B
R1014	A	C	3A	R2021	B	C	4B	R2480	B	C	3B	R4230	B	C	5D	R4459	A	C	4C	R7019	B	C	6D	RA3205	B	C	2B
R1015	A	C	3A	R2022	B	C	4B	R2482	B	C	3A	R4231	B	C	5C	R4460	A	C	4D	R7020	B	C	6D	RA3206	B	C	2B
R1016	A	C	3B	R2023	B	C	4B	R2483	B	C	3A	R4232	B	C	5C	R4461	A	C	4C	R7021	B	C	5D	RA3651	A	C	2C
R1017	A	C	3B	R2024	B	C	4B	R2484	B	C	3A	R4233	A	C	4C	R4462	A	C	1A	R7022	B	C	5D	RA3652	A	C	2C
R1018	A	C	3B	R2025	B	C	5A	R2485	B	C	3A	R4234	A	C	5C	R4463	A	C	3D	R7023	B	C	5C	RA4201	B	C	4C
R1019	A	C	3A	R2026	B	C	4A	R2486	B	C	3A	R4235	A	C	5C	R4464	A	C	3D	R7024	B	C	5C	RA4202	B	C	4C
R1021	A	C	4B	R2027	B	C	4A	R2487	B	C	3A	R4236	A	C	5C	R4465	A	C	4C	R7025	A	C	6D	RA4203	B	C	5C
R1022	A	C	4B	R2028	B	C	5A	R2488	B	C	3B	R4301	B	C	3C	R4466	A	C	3D	R7026	A	C	6D	RA4204	B	C	5C
R1023	A	C	4B	R2029	B	C	5B	R2489	B	C	3B	R4302	B	C	3C	R4701	A	C	1D	R7027	A	C	6D	RA4301	B	C	3D
R1024	A	C	2A	R2030	B	C	5B	R3001	B	C	2B	R4303	B	C	3C	R4702	A	C	1D	R7028	A	C	6D	RA4302	B	C	3C
R1025	A	C	2A	R2031	B	C	5B	R3004	B	C	2C	R4304	B	C	3C	R4703	A	C	1D	R7029	B	C	6D	RA4303	B	C	3C
R1026	A	C	3A	R2033	B	C	5A	R3006	B	C	2C	R4305	B	C	3C	R4704	A	C	1D	R7030	B	C	6D	RA4304	B	C	3C
R1027	A	C	3B	R2034	B	C	4B	R3008	B	C	1C	R4306	B	C	3C	R4705	A	C	1D	R7032	B	C	6D	RA4305	B	C	4D
R1028	A	C	2A	R2036	B	C	5B	R3009	B	C	2C	R4307	B	C	3C	R4706	A	C	1D	R7033	B	C	6D	RA4306	B	C	4D
R1029	A	C	2A	R2037	B	C	4B	R3010	B	C	1C	R4308	B	C	3C	R4707	A	C	1D	R7034	B	C	6D	RA4307	B	C	4D
R1030	A	C	3B	R2039	B	C	4B	R3011	A	C	3A	R4309	B	C	3D	R4708	A	C	1D	R7035	B	C	6D	RA4308	B	C	4D
R1031	A	C	3B	R2040	B	C	4A	R3012	A	C	3A	R4310	B	C	3C	R4709	A	C	1D	R7036	A	C	6D	RA4309	B	C	4D
R1032	A	C	3B	R2041	B	C	4A	R3102	A	C	2B	R4311	B	C	3C	R4710	A	C	1D	R7037	A	C	5D	RA4310	B	C	4D
R1033	A	C	3B	R2042	B	C	5A	R3103	A	C	2B	R4312	B	C	3C	R4711	A	C	1D	R8001	B	C	6C				
R1034	A	C	3B	R2043	B	C	4A	R3104	A	C	1A	R4313	B	C	3D	R4712	A	C	1D	R8002	B	C	6B	**TEST POINT**			
R1035	A	C	3A	R2044	B	C	4A	R3105	A	C	1A	R4314	B	C	3D	R4713	A	C	1D	R8003	B	C	5C	TP4201	A	C	5C
R1036	A	C	3B	R2045	B	C	4A	R3106	A	C	2B	R4315	B	C	4C	R4714	A	C	1D	R8004	B	C	4B	TP4202	A	C	5C
R1037	A	C	3B	R2046	B	C	4A	R3201	B	C	2A	R4316	B	C	4C	R4801	B	C	1D	R8005	B	C	4B	TP4203	A	C	5C
R1038	A	C	3B	R2051	B	C	5A	R3202	B	C	2A	R4317	B	C	4C	R4802	B	C	2C	R8006	B	C	4C	TP4801	A	C	1D
R1039	A	C	3A	R2052	B	C	5A	R3203	B	C	2A	R4318	B	C	4C	R4803	B	C	2D	R8007	B	C	4C				
R1040	A	C	3A	R2053	B	C	3B	R3204	B	C	2A	R4319	B	C	4C	R4804	B	C	2D	R8008	B	C	6B	**OTHER**			
R1041	A	C	3B	R2054	B	C	3B	R3205	B	C	2A	R4320	B	C	4C	R4805	B	C	2D	R8009	B	C	6B	F7001	A	C	6D
R1042	A	C	3A	R2055	B	C	3B	R3206	B	C	2A	R4321	B	C	3C	R4806	B	C	2D	R8010	B	C	6B	J8001	A	D	6B
R1043	A	C	3A	R2056	B	C	3B	R3207	B	C	1B	R4322	B	C	3C	R4807	B	C	2D	R8011	B	C	5C	LC2021	B	C	4B
R1044	A	C	3A	R2057	B	C	3B	R3208	B	C	1B	R4323	B	C	3D	R4808	B	C	2D	R8012	B	C	5C	LC2022	B	C	4B
R1045	A	C	3B	R2058	B	C	3B	R3209	B	C	2A	R4324	B	C	3D	R4809	B	C	2D	R8013	B	C	5C	LC2023	B	C	5B
R1046	A	C	4A	R2059	B	C	3C	R3210	B	C	1A	R4325	B	C	3D	R4810	B	C	2D	R8014	B	C	5C	TH2021	B	C	5A
R1047	A	C	4A	R2060	B	C	3B	R3211	B	C	1A	R4326	B	C	3D	R4811	B	C	2D	R8015	B	C	4C	TH2022	B	C	5B
R1048	A	C	4B	R2061	B	C	3C	R3212	B	C	1A	R4327	B	C	3D	R4812	B	C	2D	R8016	B	C	6A	TH2023	B	C	4B
R1049	A	C	4B	R2062	B	C	5A	R3213	B	C	1A	R4328	B	C	3C	R4813	B	C	2D	R8017	B	C	6C	X1401	A	C	5A
R1050	A	C	3B	R2063	B	C	5A	R3214	B	C	1A	R4329	B	C	3C	R4814	B	C	2D	R8018	B	C	6C	X1451	A	C	6A
R1051	A	C	4B	R2064	B	C	5A	R3215	B	C	1A	R4401	A	C	4C	R4815	B	C	2D	R8019	B	C	6C	X2001	B	C	3C
R1052	A	C	4B	R2065	B	C	5A	R3216	B	C	2A	R4402	A	C	4C	R4816	B	C	1D	R8020	B	C	6C	X2002	B	C	3B
R1053	A	C	4B	R2351	B	C	4A	R3217	B	C	2A	R4403	A	C	4C	R4817	B	C	1D	R8021	B	C	5C	X2351	B	C	4A
R1054	A	C	3B	R2352	B	C	4A	R3218	B	C	2A	R4404	A	C	4C	R4818	B	C	1D	R8022	B	C	6C	X3101	A	C	1B
R1055	B	C	1B	R2353	B	C	4A	R3219	B	C	2A	R4405	A	C	4C	R4819	B	C	1D	R8023	B	C	6C	X4401	A	C	4C
R1056	A	C	3B	R2354	B	C	4A	R3220	A	C	3A	R4406	A	C	4C	R4820	B	C	1C	R8024	B	C	6C	X8001	B	C	5C
R1057	A	C	2B	R2355	B	C	4A	R3221	B	C	2A	R4407	A	C	4C	R4821	B	C	1D	R8025	B	C	6C	X8002	B	C	5A
R1058	A	C	4A	R2356	B	C	4A	R3222	B	C	2A	R4408	A	C	4C	R4822	B	C	1D	R8026	B	C	6C	X8003	B	C	5C
R1059	A	C	3B	R2357	B	C	4A	R3223	B	C	2A	R4409	A	C	4C	R4823	B	C	1D	R8027	B	C	6C				
R1060	A	C	2B	R2358	B	C	4A	R3224	B	C	2A	R4410	A	C	3C	R4824	B	C	1D	R8031	B	C	5A				
R1061	A	C	2B	R2359	B	C	4A	R3225	B	C	1A	R4411	A	C	3C	R4825	B	C	1D	R8032	B	C	6A				
R1062	A	C	2B	R2360	B	C	4A	R3226	B	C	1A	R4412	A	C	3C	R4826	B	C	2D	R8034	B	C	6A				
R1063	A	C	2B	R2361	B	C	4A	R3227	B	C	1A	R4413	A	C	3C	R4827	B	C	2D	R8035	B	C	6A				
R1064	A	C	2B	R2362	B	C	4A	R3228	B	C	1A	R4414	A	C	3C	R4828	B	C	1D	R8036	B	C	6A				
R1065	A	C	2B	R2363	B	C	4A	R3229	B	C	1A	R4415	A	C	3C	R4829	B	C	1D	R8037	B	C	6A				
R1066	A	C	3B	R2364	B	C	4A	R3230	B	C	1A	R4416	A	C	3C	R4830	B	C	1D	R8038	B	C	5A				
R1069	A	C	4B	R2365	B	C	4A	R3231	B	C	1A	R4417	A	C	4C	R4831	B	C	1D	R8039	B	C	5A				
R1070	A	C	4B	R2402	B	C	3A	R3232	B	C	1A	R4418	A	C	4C	R4832	B	C	1D	R8040	B	C	5A				
R1071	A	C	4B	R2403	B	C	3A	R3233	B	C	2A	R4419	A	C	3C	R4833	B	C	1D	R8041	B	C	5A				
R1072	A	C	4B	R2404	B	C	3A	R3234	B	C	2A	R4420	A	C	3C	R4834	B	C	1D	R8042	B	C	5A				
R1401	A	C	5B	R2405	B	C	3A	R3235	B	C	2A	R4421	A	C	3C	R4835	B	C	1D	R8043	B	C	5A				
R1402	A	C	5B	R2406	B	C	3A	R3236	B	C	1A	R4422	A	C	3C	R4836	B	C	1D	R8044	B	C	5A				
R1403	A	C	5B	R2407	B	C	3A	R3237	B	C	1A	R4423	A	C	3C	R4837	B	C	1D	R8045	B	C	5A				
R1404	A	C	5B	R2408	B	C	3A	R3601	A	C	2C	R4424	A	C	3C	R4838	B	C	1D	R8046	B	C	5B				
R1405	A	C	5A	R2409	B	C	3A	R3602	A	C	2C	R4425	A	C	3C	R4839	B	C	1D	R8047	B	C	5B				
R1406	A	C	5A	R2410	B	C	3B	R3603	A	C	2C	R4426	A	C	3C	R4841	B	C	1D	R8050	B	C	6B				
R1407	A	C	6A	R2411	B	C	3B	R3651	A	C	2C	R4427	A	C	3C	R4844	B	C	1D	R8051	B	C	6A				
R1408	A	C	5A	R2412	B	C	3B	R3652	A	C	2C	R4428	A	C	3C	R4851	A	C	3C	R8052	B	C	5A				
R1409	A	C	5B	R2413	B	C	3B	R3653	A	C	2C	R4429	A	C	3C	R4852	A	C	2C	R8053	B	C	6A				
R1410	A	C	5A	R2414	B	C	3A	R4201	B	C	4C	R4430	A	C	3C	R4853	A	C	3C	R8054	B	C	6A				
R1411	A	C	5A	R2417	B	C	3A	R4202	B	C	4C	R4431	A	C	3D	R4854	A	C	2D	R8055	B	C	6A				
R1412	A	C	5A	R2418	B	C	3A	R4203	B	C	5C	R4432	A	C	3D	R4855	A	C	2C	R8056	B	C	6C				
R1413	A	C	5A	R2419	B	C	3A	R4204	B	C	5C	R4433	A	C	3C	R4856	A	C	1C	R8057	B	C	6C				
R1414	A	C	5B	R2420	B	C	3A	R4205	B	C	5C	R4434	A	C	3D	R4857	A	C	1D	R8058	B	C	6C				
R1417	A	C	4A	R2421	B	C	3A	R4206	B	C	5D	R4435	A	C	3D	R4858	A	C	2D	R8059	B	C	6C				
R1418	A	C	6A	R2422	B	C	4A	R4207	B	C	4C	R4436	A	C	3D	R4859	A	C	2D	RA1001	A	C	3B				
R1419	A	C	5B	R2423	B	C	4A	R4208	B	C	5C	R4437	A	C	3D	R4860	A	C	2D	RA1002	A	C	3B				
R1420	A	C	5A	R2424	B	C	3A	R4209	B	C	5C	R4438	A	C	3D	R4861	A	C	3D	RA1003	A	C	3B				
R1421	A	C	4B	R2425	B	C	4A	R4210	B	C	5C	R4439	A	C	3D	R4862	A	C	2D	RA1004	A	C	3B				
R1422	A	C	4B	R2427	B	C	4A	R4211	B	C	5C	R4440	A	C	3D	R4863	A	C	2D	RA1005	A	C	3A				
R1423	A	C	5B	R2428	B	C	4A	R4212	B	C	5C	R4441	A	C	4D	R7001	A	C	5C	RA1006	A	C	4A				
R1424	A	C	5B	R2429	B	C	4A	R4213	B	C	5C	R4442	A	C	4D	R7002	A	C	5C	RA1007	A	C	4A				
R1425	A	C	5B	R2433	B	C	4B	R4214	B	C	5C	R4443	A	C	1A	R7003	A	C	5C	RA1010	A	C	3B				
R1426	A	C	4B	R2434	B	C	4B	R4215	B	C	5C	R4444	A	C	1A	R7004	A	C	5D	RA1402	A	C	5B				
R1427	A	C	5B	R2454	B	C	3A	R4216	B	C	5C	R4445	A	C	1A	R7005	A	C	5D	RA1403	A	C	5A				
R1428	A	C	5B	R2455	B	C	3B	R4217	B	C	5C	R4446	A	C	3D	R7006	A	C	5D	RA1404	A	C	5A				
R1430	A	C	4B	R2456	B	C	3B	R4218	B	C	5C	R4447	A	C	3D	R7007	A	C	5D	RA1406	A	C	5B				

-MAIN1-

COMPONENT SIDE (A)

-POWER SAVE-

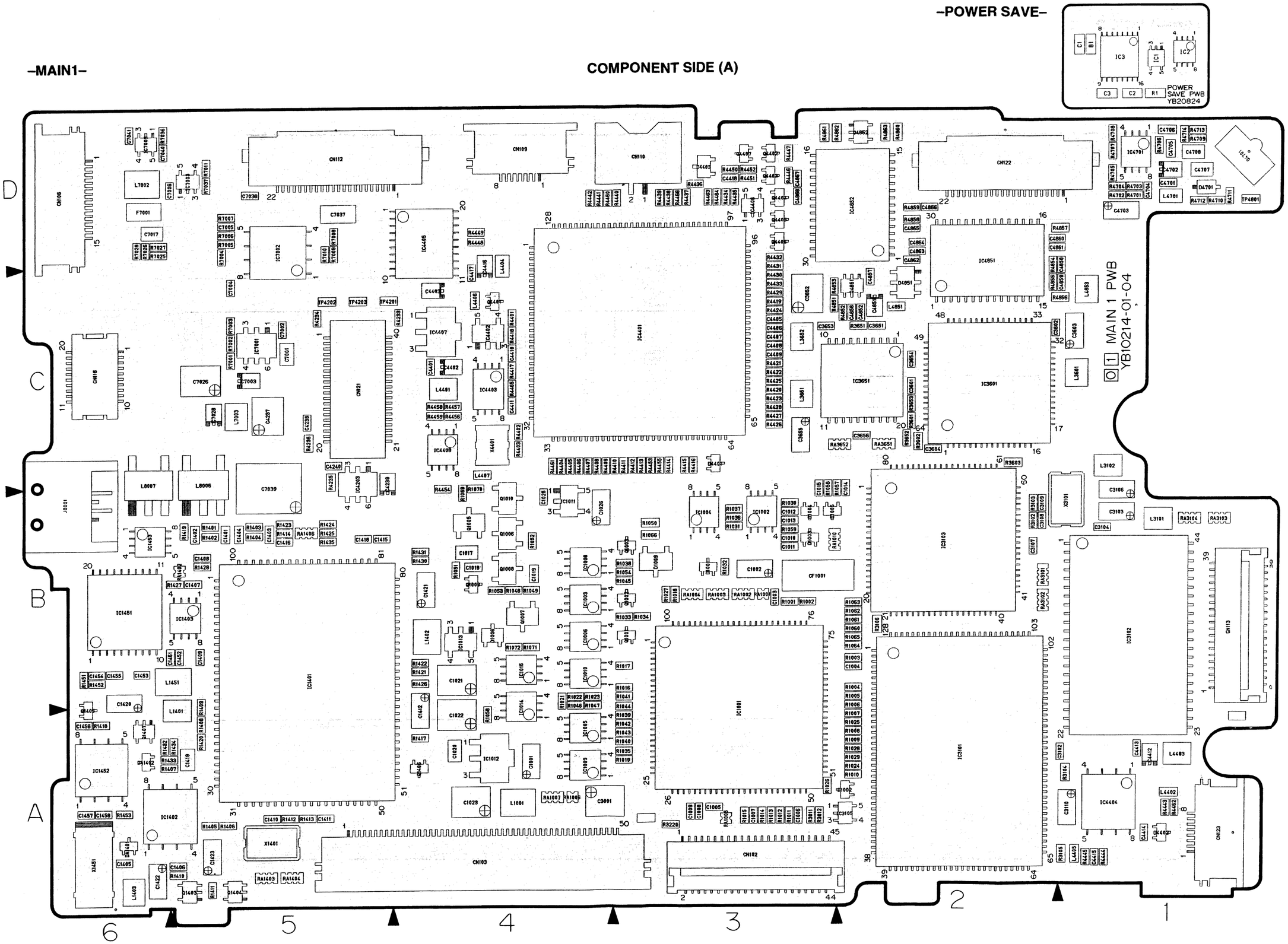

4.19 AUDIO AD/DA SCHEMATIC DIAGRAM

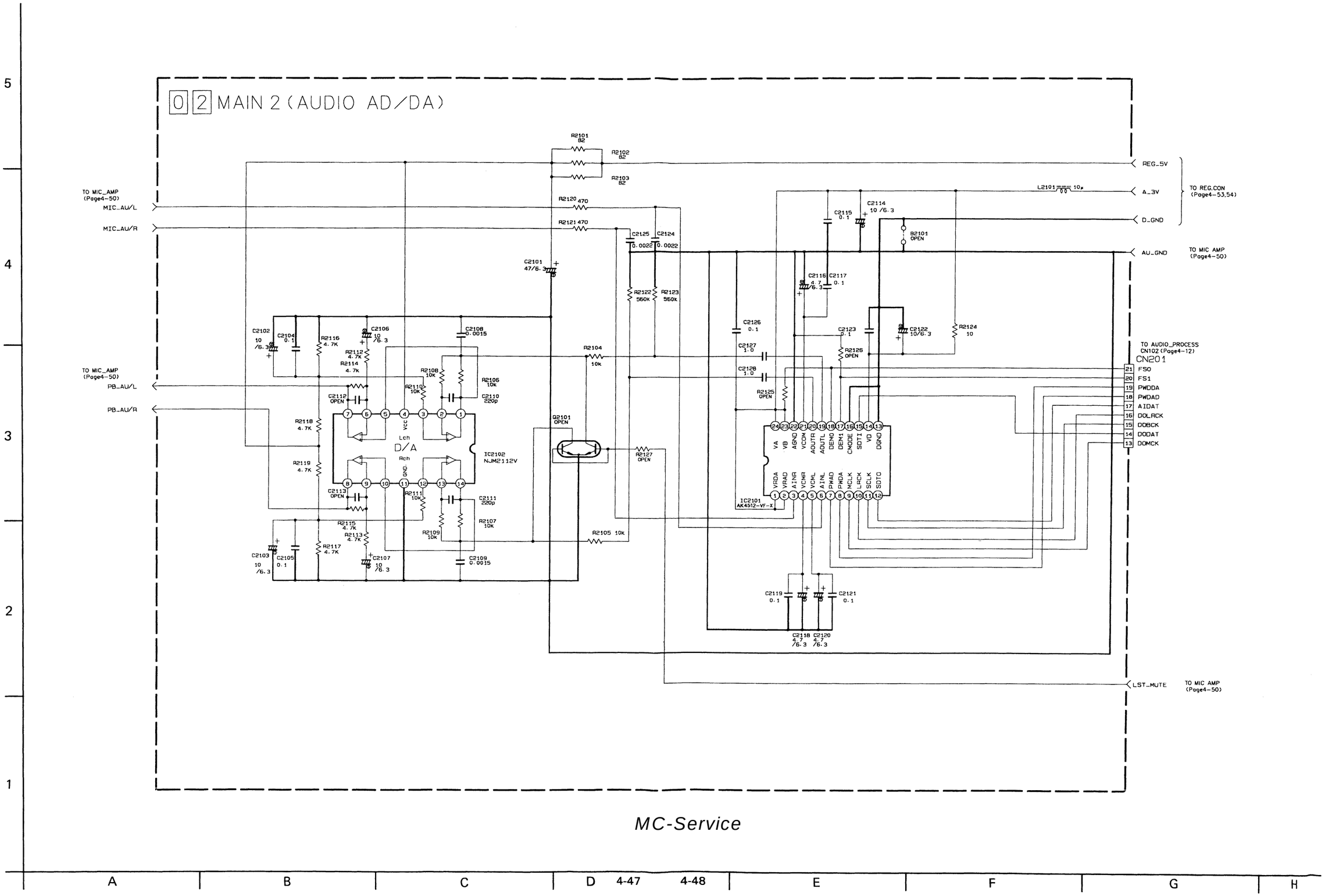

4.20 MIC AMP SCHEMATIC DIAGRAM

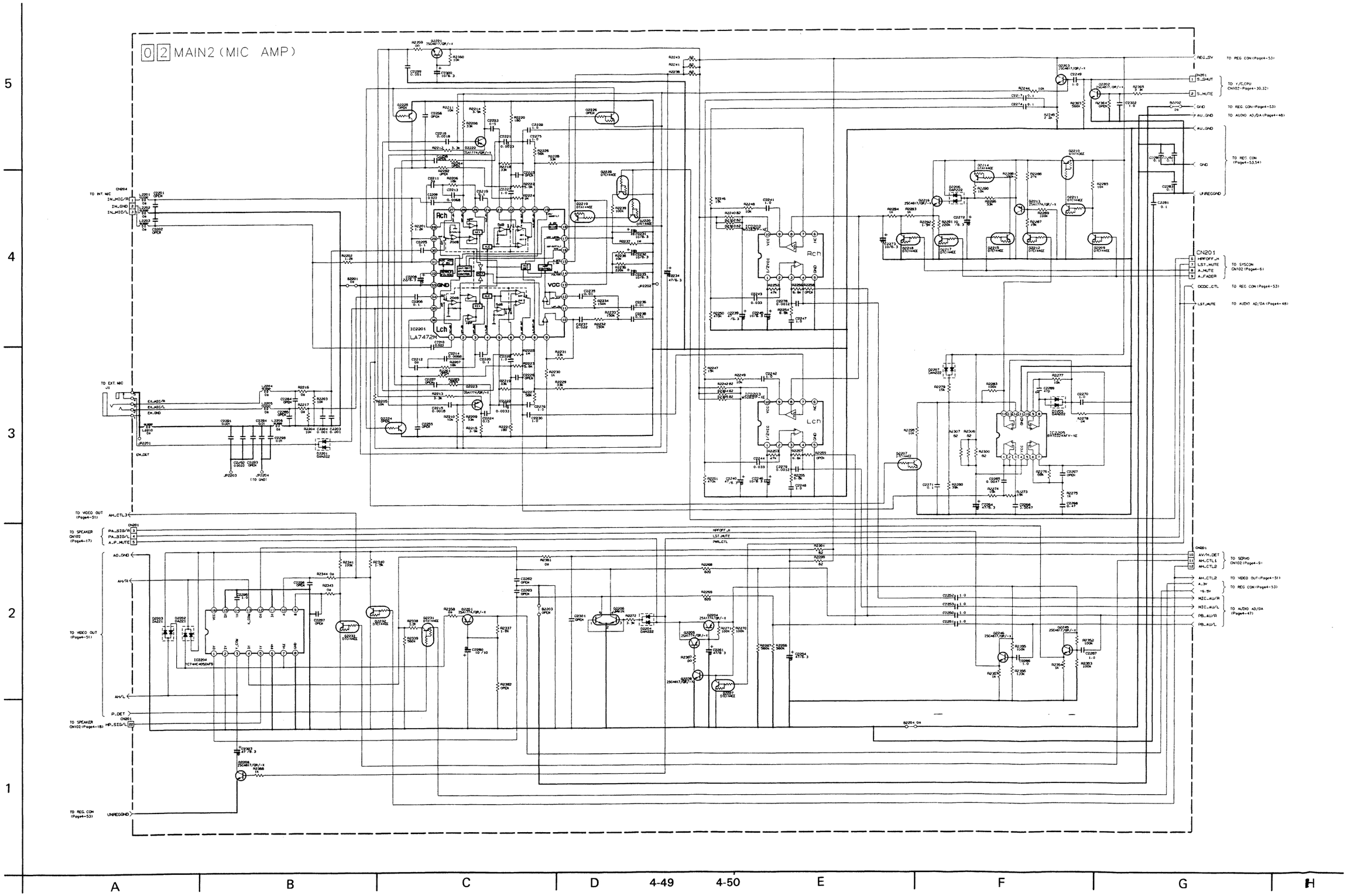

4.21 VIDEO OUT SCHEMATIC DIAGRAM

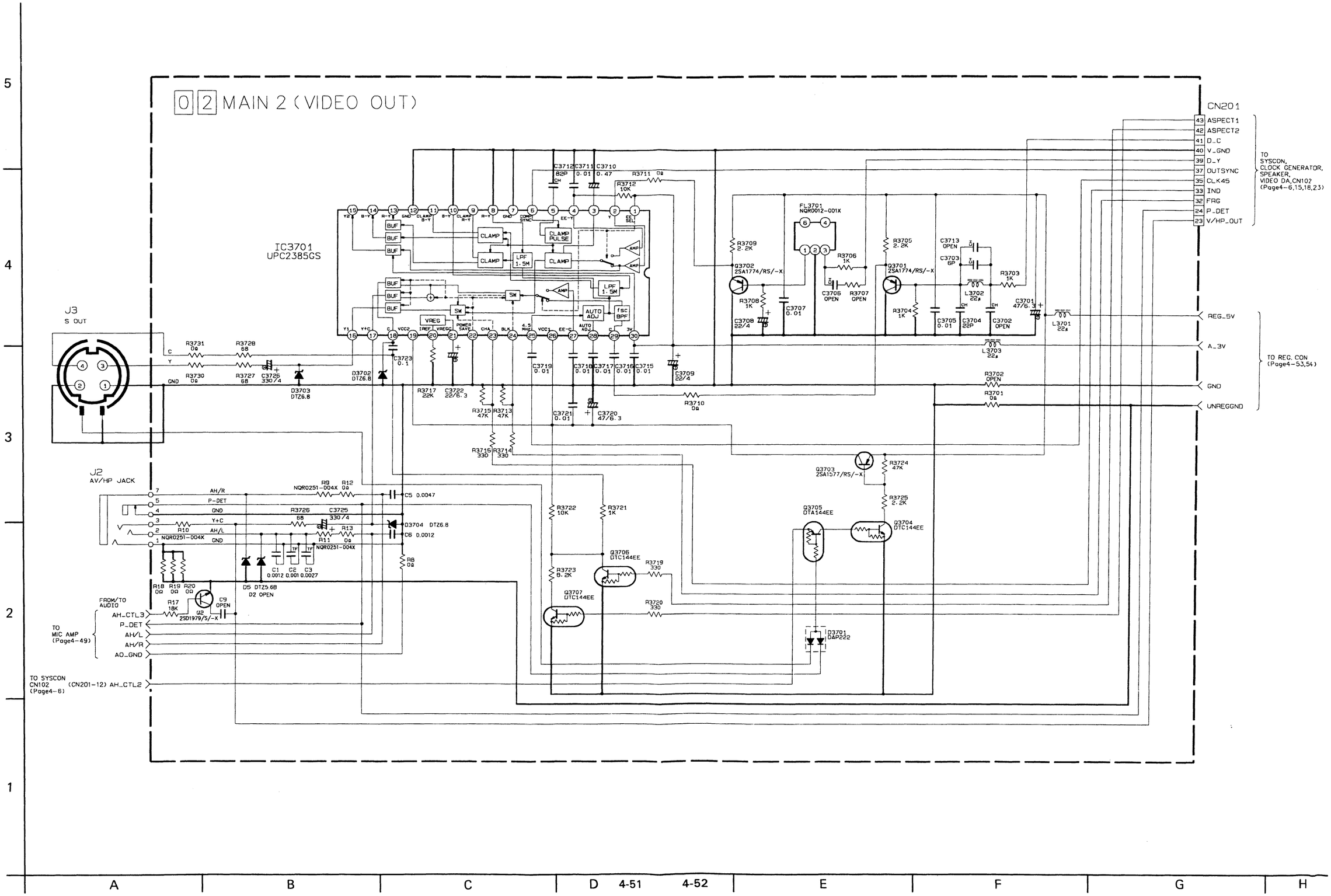

4.22 REGULATOR CONTOROL SCHEMATIC DIAGRAM

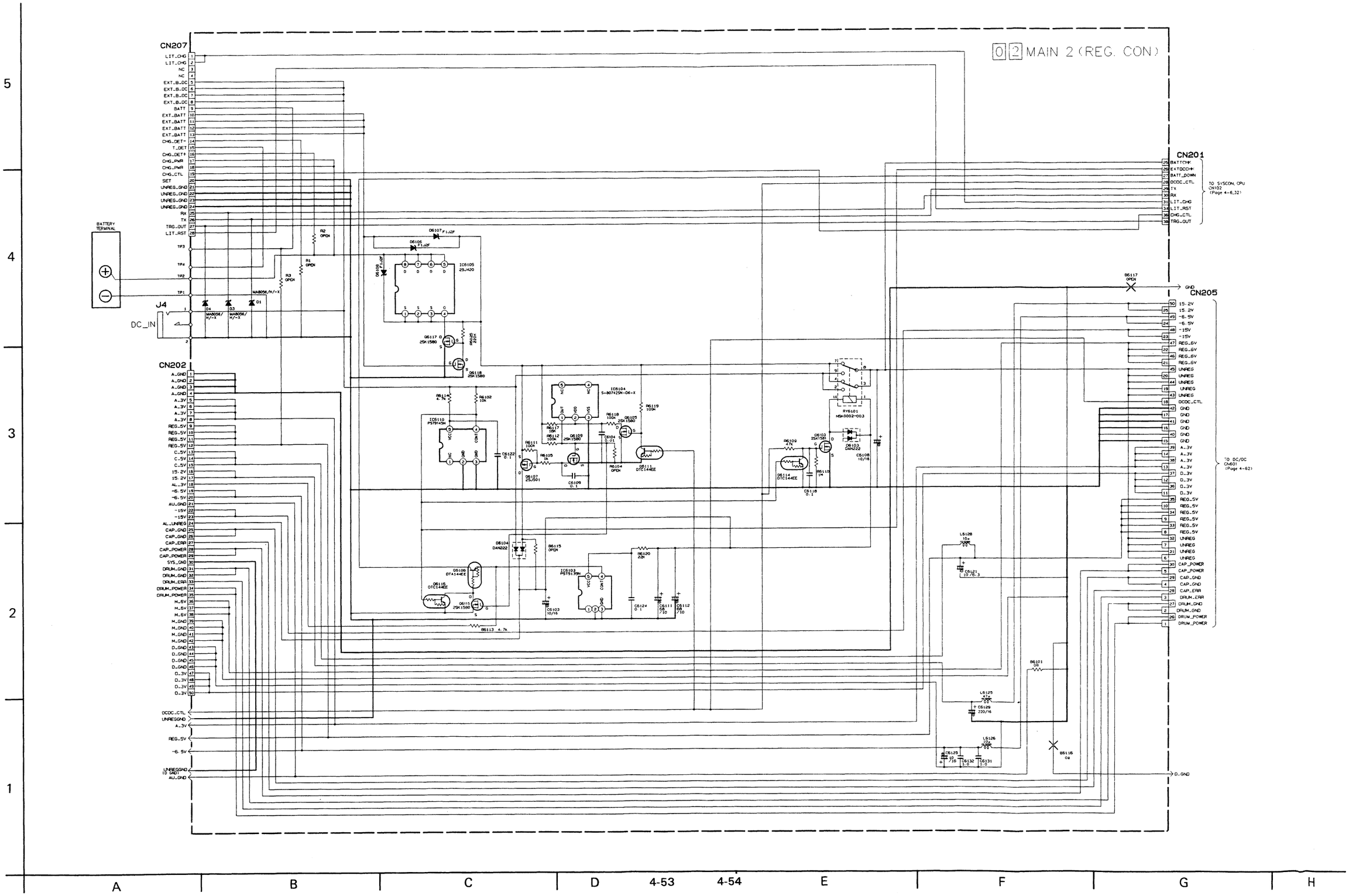

4.23 MAIN2 CIRCUIT BOARD

FOIL SIDE (B)

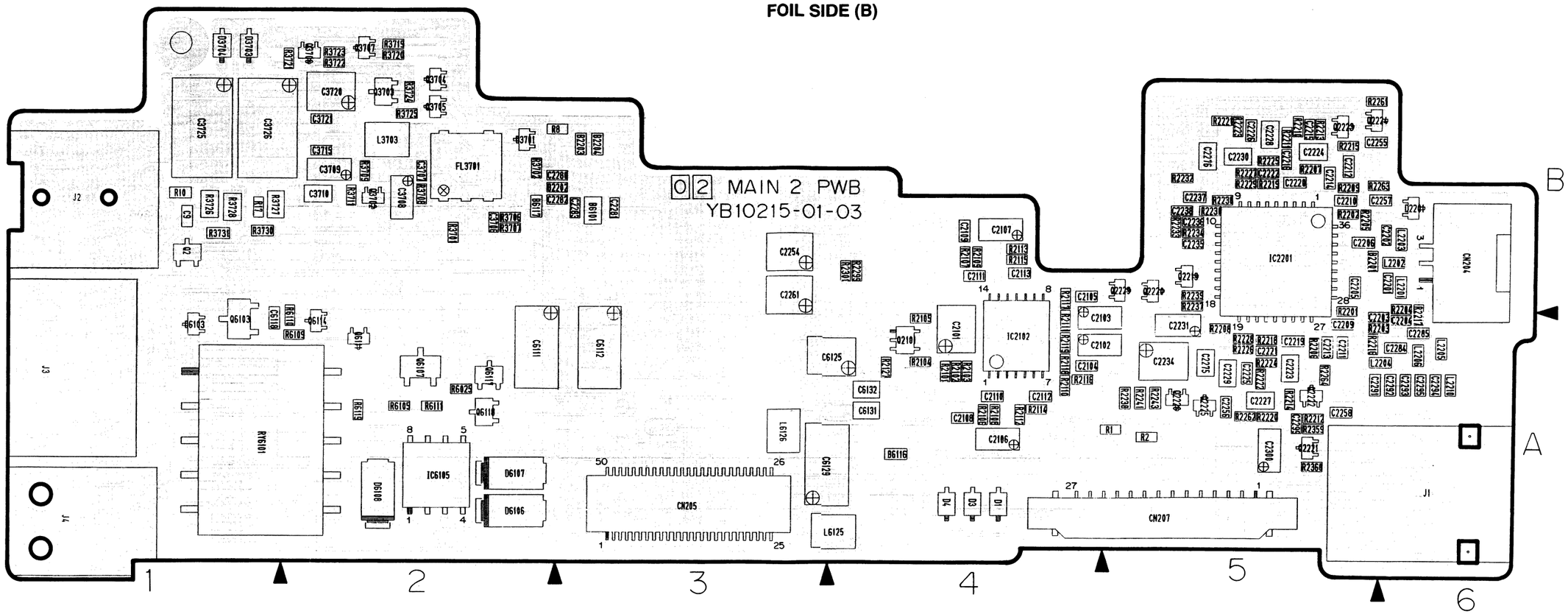

MC-Service

COMPONENT PARTS LOCATION GUIDE (MAIN2 PWB)

REF.No.	LOCATION		
CAPACITOR			
C1	A	C	1B
C2	A	C	1B
C3	A	C	1B
C5	A	C	1B
C6	A	C	1B
C9	B	C	1B
C2101	B	C	4A
C2102	B	C	4A
C2103	B	C	4A
C2104	B	C	4A
C2105	B	C	4B
C2106	B	C	4A
C2107	B	C	4B
C2108	B	C	4A
C2109	B	C	4B
C2110	B	C	4A
C2111	B	C	4B
C2112	B	C	4A
C2113	B	C	4B
C2114	A	C	4B
C2115	A	C	4B
C2116	A	C	4B
C2117	A	C	4B
C2118	A	C	5A
C2119	A	C	5B
C2120	A	C	5A
C2121	A	C	5A
C2122	A	C	4A
C2123	A	C	4A
C2124	A	C	5A
C2125	A	C	5B
C2126	A	C	4B
C2127	A	C	4A
C2128	A	C	4A
C2201	B	C	6B
C2202	B	C	6B
C2203	B	C	5A
C2204	B	C	6A
C2205	B	C	5B
C2206	B	C	5B
C2208	A	C	5B
C2209	B	C	5A
C2210	B	C	5B
C2211	B	C	5A
C2212	B	C	5B
C2213	B	C	5A
C2214	B	C	5B
C2215	B	C	5B
C2216	B	C	5B
C2219	B	C	5A
C2220	B	C	5B
C2221	B	C	5A
C2222	B	C	5B
C2223	B	C	5A
C2224	B	C	5B
C2225	B	C	5A
C2226	B	C	5B
C2227	B	C	5A
C2228	B	C	5B
C2229	B	C	5A
C2230	B	C	5B
C2231	B	C	5A
C2232	A	C	5B
C2233	A	C	5B

REF.No.	LOCATION		
C2234	B	C	5A
C2235	B	C	5B
C2236	B	C	5B
C2237	B	C	5B
C2238	B	C	5B
C2239	A	C	6A
C2240	A	C	5A
C2241	A	C	5A
C2242	A	C	5A
C2243	A	C	5A
C2244	A	C	5A
C2245	A	C	5B
C2246	A	C	5A
C2247	A	C	5B
C2248	A	C	5A
C2249	A	C	5A
C2250	A	C	4B
C2251	A	C	4A
C2252	A	C	5B
C2253	A	C	5A
C2254	B	C	3B
C2255	B	C	5B
C2256	B	C	5A
C2257	B	C	5B
C2258	B	C	5A
C2260	A	C	3B
C2261	B	C	3B
C2262	A	C	3B
C2263	A	C	3B
C2264	A	C	5B
C2265	A	C	5B
C2266	A	C	5B
C2267	A	C	5B
C2268	A	C	5B
C2269	A	C	5B
C2270	A	C	5B
C2271	A	C	5B
C2272	A	C	6B
C2273	A	C	6B
C2274	A	C	5A
C2275	B	C	5A
C2276	B	C	5B
C2277	A	C	5A
C2278	A	C	5B
C2279	A	C	5A
C2280	B	C	2B
C2281	B	C	3B
C2282	B	C	2B
C2283	B	C	3B
C2284	B	C	6A
C2285	B	C	6A
C2286	A	C	4A
C2287	A	C	4B
C2291	B	C	5A
C2292	B	C	6A
C2293	B	C	6A
C2294	B	C	6A
C2295	B	C	6A
C2296	A	C	3B
C2297	A	C	3B
C2298	A	C	3B
C2299	B	C	5A
C2300	B	C	5A
C2301	A	C	3A
C2302	A	C	4A

REF.No.	LOCATION		
C2303	A	C	3A
C3701	A	C	2B
C3702	A	C	2B
C3703	A	C	2B
C3704	A	C	2B
C3705	A	C	2B
C3706	B	C	2B
C3707	B	C	2B
C3708	B	C	2B
C3709	B	C	2B
C3710	B	C	2B
C3711	A	C	2B
C3712	A	C	2B
C3713	A	C	2B
C3715	B	C	2B
C3716	A	C	2B
C3717	A	C	2B
C3718	A	C	2B
C3719	A	C	2B
C3720	B	C	2B
C3721	B	C	2B
C3722	A	C	1B
C3723	A	C	1B
C3725	B	C	1B
C3726	B	C	1B
C6103	A	C	2A
C6104	A	C	2A
C6108	A	C	1A
C6109	A	C	2A
C6111	B	C	2A
C6112	B	C	3A
C6118	B	C	1A
C6121	A	C	3A
C6122	A	C	2A
C6124	A	C	2B
C6125	B	C	4A
C6129	B	C	3A
C6131	B	C	4A
C6132	B	C	4A
CONNECTOR			
CN201	A	C	4A
CN202	A	C	3A
CN204	B	C	6B
CN205	B	C	3A
CN207	B	C	5A
DIODE			
D1	B	C	4A
D2	A	C	1B
D3	B	C	4A
D4	B	C	4A
D5	A	C	1B
D2201	B	C	6B
D2202	A	C	3B
D2203	A	C	3B
D2204	A	C	4B
D2205	A	C	5B
D2206	A	C	6B
D2207	A	C	5B
D3701	B	C	2B
D3702	A	C	1B
D3703	B	C	1B

REF.No.	LOCATION		
D3704	B	C	1B
D6103	B	C	1A
D6104	A	C	3A
D6106	B	C	2A
D6107	B	C	2A
D6108	B	C	2A
IC			
IC2101	A	C	4A
IC2102	B	C	4A
IC2201	B	C	5B
IC2202	A	C	5A
IC2203	A	C	5A
IC2204	A	C	3B
IC2205	A	C	5B
IC3701	A	C	2B
IC6103	A	C	2A
IC6104	A	C	2A
IC6105	B	C	2A
IC6110	A	C	2A
COIL			
L2101	A	C	4A
L2201	B	C	6B
L2202	B	C	6B
L2203	B	C	6B
L2204	B	C	5A
L2205	B	C	6A
L2206	B	C	6A
L2210	B	C	6A
L3701	A	C	2B
L3702	A	C	2B
L3703	B	C	2B
L6125	B	C	4A
L6126	B	C	3A
L6128	A	C	3A
TRANSISTOR			
Q2	B	C	1B
Q2101	B	C	4A
Q2201	A	C	3A
Q2202	A	C	4A
Q2203	A	C	5A
Q2204	A	C	4B
Q2205	A	C	4B
Q2206	A	C	4B
Q2207	A	C	5B
Q2208	A	C	4A
Q2209	A	C	6B
Q2210	A	C	5B
Q2211	A	C	5B
Q2212	A	C	5B
Q2213	A	C	6B
Q2214	A	C	6B
Q2215	A	C	6B
Q2216	A	C	6B
Q2217	A	C	6B
Q2218	A	C	6B
Q2219	B	C	5B
Q2220	B	C	5B
Q2221	B	C	5A
Q2222	B	C	5A

REF.No.	LOCATION		
Q2223	B	C	5B
Q2224	B	C	5B
Q2225	B	C	5A
Q2226	B	C	5A
Q2227	A	C	3A
Q2228	A	C	3B
Q2229	B	C	5B
Q2231	A	C	3A
Q2232	A	C	3B
Q2233	A	C	3B
Q2245	A	C	4B
Q2246	A	C	4A
Q3701	A	C	2B
Q3702	B	C	2B
Q3703	B	C	2B
Q3704	B	C	2B
Q3705	B	C	2B
Q3706	B	C	2B
Q3707	B	C	2B
Q6103	B	C	1A
Q6105	A	C	2A
Q6106	A	C	2A
Q6107	B	C	2A
Q6109	A	C	2A
Q6111	B	C	2A
Q6114	B	C	2A
Q6115	A	C	2A
Q6116	A	C	2A
Q6117	B	C	2A
Q6118	B	C	2A
RESISTOR			
R1	B	C	5A
R2	B	C	5A
R3	A	C	2B
R8	B	C	2B
R9	A	C	1B
R10	B	C	1B
R11	A	C	1B
R12	A	C	1B
R13	A	C	1B
R17	B	C	1B
R18	A	C	1A
R19	A	C	1A
R20	A	C	1A
R2101	B	C	4A
R2102	B	C	4A
R2103	B	C	4A
R2104	B	C	4A
R2105	B	C	4A
R2106	B	C	4A
R2107	B	C	4B
R2108	B	C	4A
R2109	B	C	4B
R2110	B	C	4A
R2111	B	C	4A
R2112	B	C	4A
R2113	B	C	4B
R2114	B	C	4A
R2115	B	C	4B
R2116	B	C	4A
R2117	B	C	4B
R2118	B	C	4A
R2119	B	C	4A

REF.No.	LOCATION			REF.No.	LOCATION			REF.No.	LOCATION		
R2120	A	C	5A	R2258	A	C	5B	R2367	A	C	4B
R2121	A	C	5B	R2259	A	C	5A	R3701	B	C	2B
R2122	A	C	4A	R2261	B	C	5B	R3702	B	C	2B
R2123	A	C	4A	R2262	B	C	5A	R3703	A	C	2B
R2124	A	C	4A	R2263	B	C	5B	R3704	A	C	2B
R2125	A	C	4A	R2264	B	C	5A	R3705	A	C	2B
R2126	A	C	4A	R2266	A	C	4B	R3706	B	C	2B
R2127	B	C	4A	R2267	A	C	4B	R3707	B	C	2B
R2201	B	C	5B	R2268	A	C	4B	R3708	B	C	2B
R2202	B	C	5B	R2269	A	C	4B	R3709	B	C	2B
R2203	B	C	5A	R2270	A	C	3B	R3710	A	C	2B
R2204	B	C	6B	R2271	A	C	4B	R3711	B	C	2B
R2205	B	C	5B	R2272	A	C	4B	R3712	A	C	2B
R2206	B	C	5A	R2273	A	C	5B	R3713	A	C	1B
R2207	B	C	5B	R2274	A	C	5B	R3714	A	C	2B
R2208	B	C	5A	R2275	A	C	5B	R3715	A	C	1B
R2209	B	C	5B	R2276	A	C	5B	R3716	A	C	2B
R2210	B	C	5B	R2277	A	C	5B	R3717	A	C	1B
R2211	B	C	5B	R2278	A	C	5B	R3719	B	C	2B
R2212	B	C	5A	R2279	A	C	5B	R3720	B	C	2B
R2213	B	C	5B	R2280	A	C	5B	R3721	B	C	2B
R2214	B	C	5A	R2283	A	C	5B	R3722	B	C	2B
R2215	B	C	5B	R2285	A	C	6B	R3723	B	C	2B
R2216	B	C	5A	R2286	A	C	6B	R3724	B	C	2B
R2217	B	C	6A	R2287	A	C	5B	R3725	B	C	2B
R2218	B	C	5A	R2288	A	C	6B	R3726	B	C	1B
R2219	B	C	5B	R2289	A	C	6B	R3727	B	C	1B
R2220	B	C	5A	R2290	A	C	6B	R3728	B	C	1B
R2221	B	C	5B	R2291	A	C	6B	R3730	B	C	1B
R2222	B	C	5A	R2292	A	C	6B	R3731	B	C	1B
R2223	B	C	5B	R2293	A	C	6B	R6025	B	C	2A
R2224	B	C	5A	R2294	A	C	6B	R6102	A	C	2A
R2225	B	C	5B	R2295	A	C	5B	R6104	A	C	2A
R2226	B	C	5A	R2296	A	C	6B	R6105	B	C	2A
R2227	B	C	5B	R2299	B	C	4B	R6109	B	C	2A
R2228	B	C	5A	R2300	A	C	5B	R6110	B	C	2A
R2229	B	C	5B	R2301	B	C	4B	R6111	B	C	2A
R2230	B	C	5B	R2302	A	C	6A	R6112	A	C	2A
R2231	B	C	5B	R2303	A	C	6A	R6114	A	C	2A
R2232	B	C	5B	R2304	A	C	5A	R6117	A	C	2A
R2233	B	C	5B	R2305	A	C	5A	R6118	A	C	2A
R2234	B	C	5B	R2306	A	C	5B	R6119	B	C	2A
R2235	A	C	5B	R2307	A	C	5B	R6120	A	C	2A
R2236	A	C	5B	R2337	A	C	3A	RY6101	B	C	1A
R2237	B	C	5B	R2338	A	C	3A				
R2238	B	C	5A	R2339	A	C	3A	**TEST POINT**			
R2239	B	C	5B	R2340	A	C	3B				
R2240	A	C	6A	R2341	A	C	3B	TP1	A	D	1B
R2241	B	C	5A	R2343	A	C	3B	TP2	A	D	2B
R2242	A	C	5A	R2344	A	C	3B	TP3	A	D	2B
R2243	B	C	5A	R2352	A	C	4B	TP4	A	D	2B
R2244	A	C	5A	R2353	A	C	4B				
R2245	A	C	5A	R2354	A	C	4B	**OTHER**			
R2246	A	C	5A	R2355	A	C	4A				
R2247	A	C	5A	R2356	A	C	4A	FL3701	B	C	2B
R2248	A	C	5A	R2357	A	C	4A	J1	A	D	6A
R2249	A	C	5A	R2358	A	C	3B	J2	A	D	1B
R2250	A	C	5A	R2359	B	C	5A	J3	A	D	1A
R2251	A	C	5A	R2360	B	C	5A	J4	A	D	1A
R2252	A	C	5A	R2361	A	C	3A				
R2253	A	C	5A	R2362	A	C	3B				
R2254	A	C	5A	R2363	A	C	5A				
R2255	A	C	5A	R2364	A	C	4A				
R2256	A	C	5B	R2365	A	C	4A				
R2257	A	C	5A	R2366	A	C	4A				

COMPONENT SIDE (A)

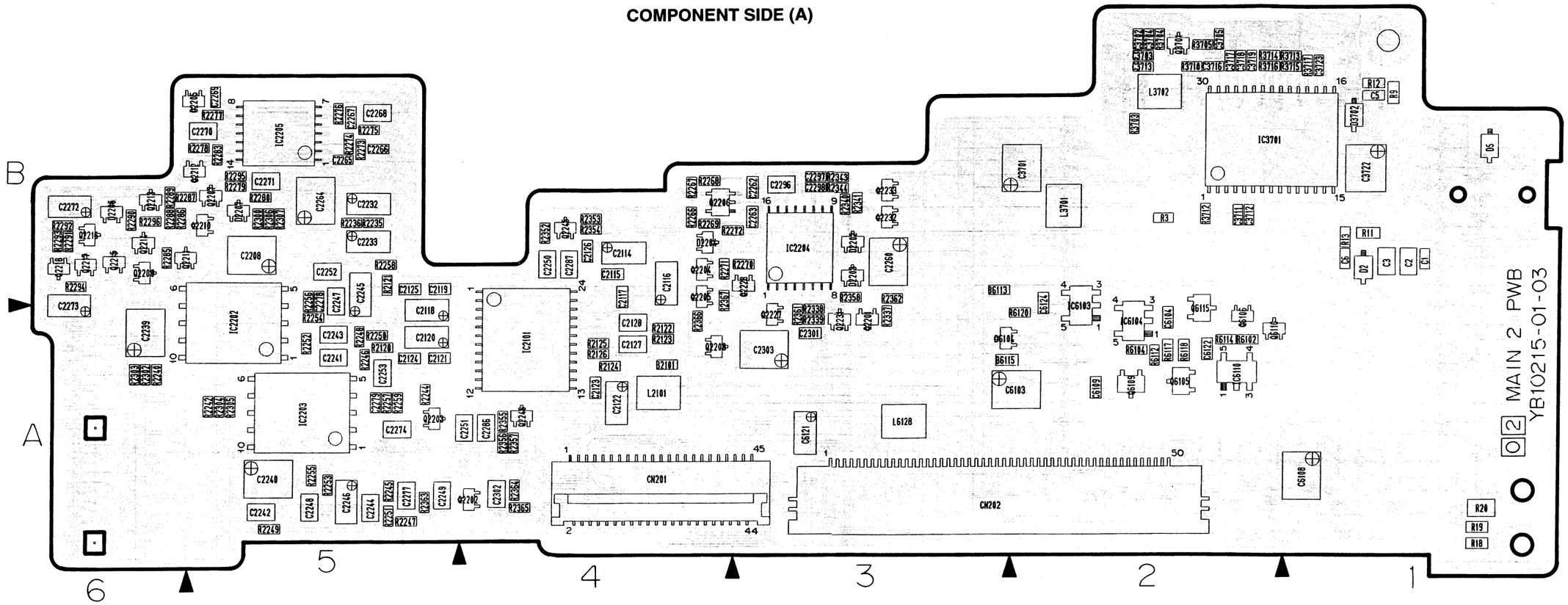

4.24 DC/DC SCHEMATIC DIAGRAM

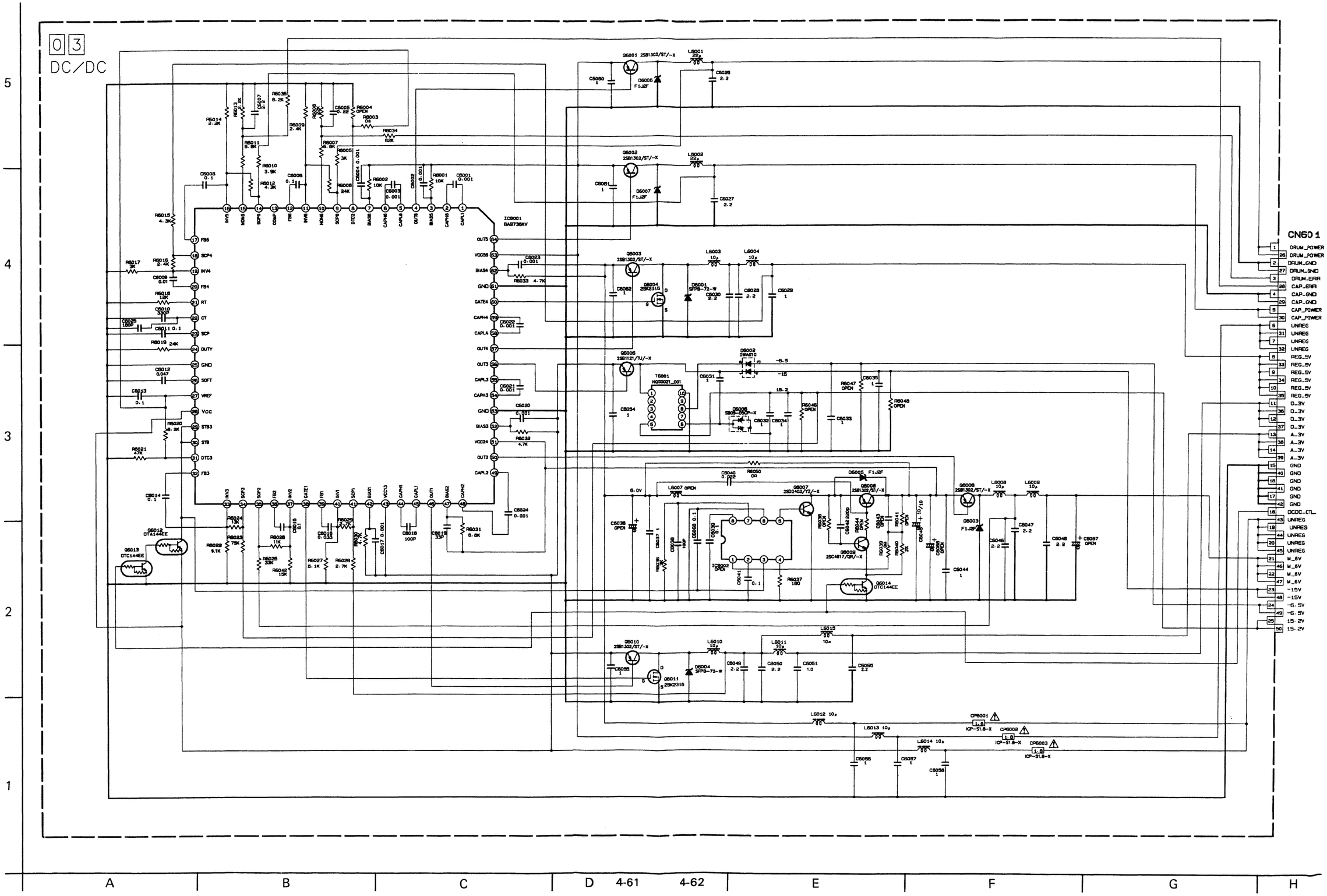

4.25 DC/DC CIRCUIT BOARD

FOIL SIDE (B)

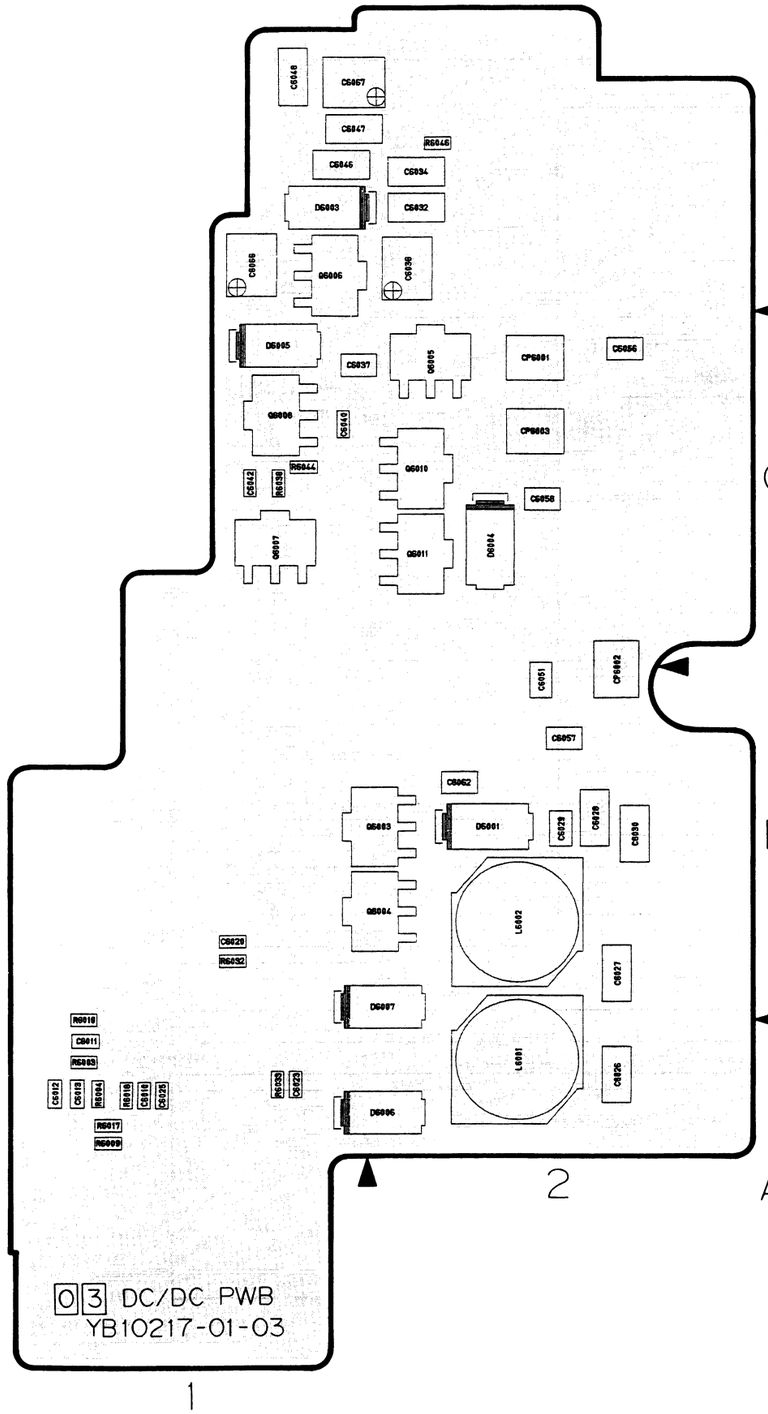

COMPONENT SIDE (A)

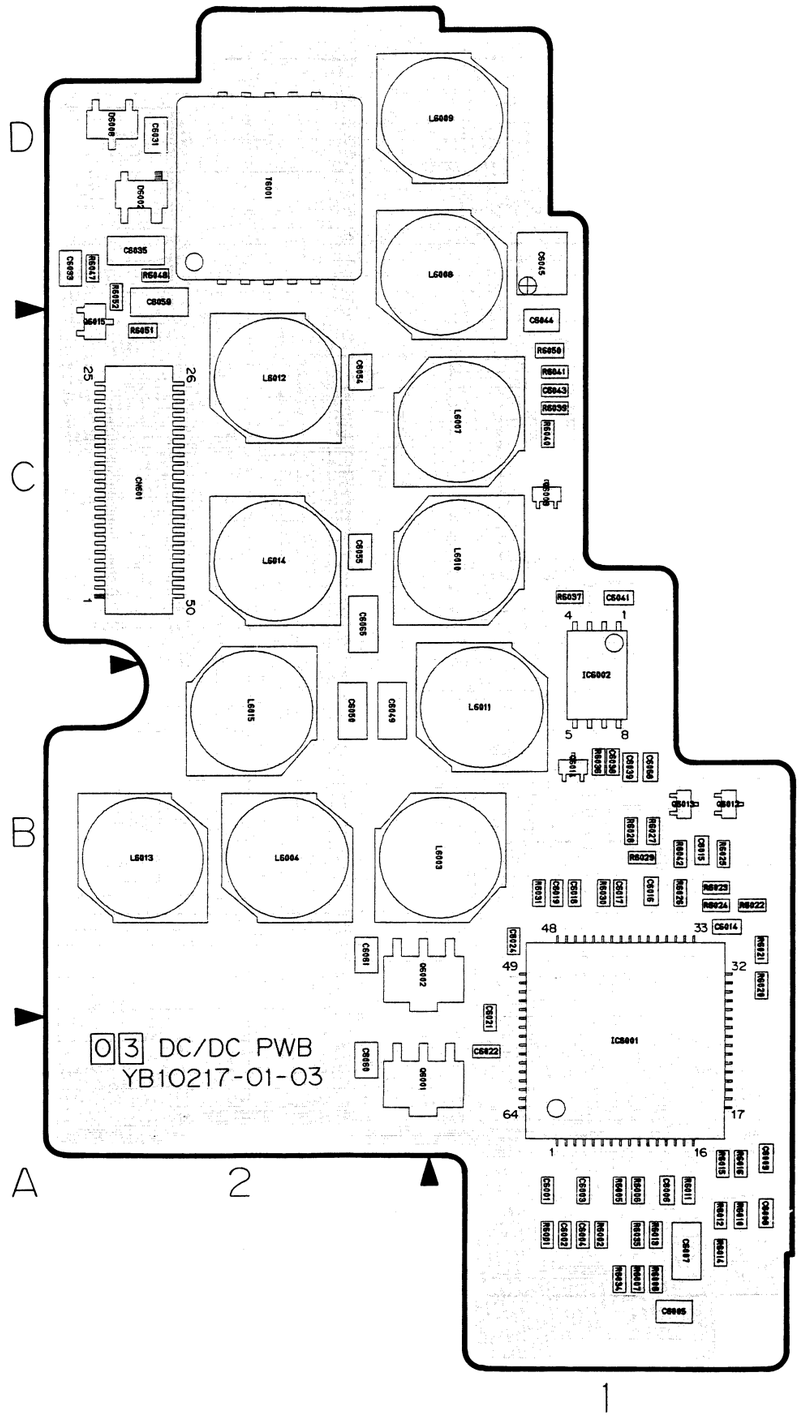

COMPONENT PARTS LOCATION GUIDE (DC/DC)

REF.No.	LOCATION		
CAPACITOR			
C6001	A	C	1A
C6002	A	C	1A
C6003	A	C	1A
C6004	A	C	1A
C6005	A	C	1A
C6006	A	C	1A
C6007	A	C	1A
C6008	A	C	1A
C6009	A	C	1A
C6010	B	C	1A
C6011	B	C	1A
C6012	B	C	1A
C6013	B	C	1A
C6014	A	C	1B
C6015	A	C	1B
C6016	A	C	1B
C6017	A	C	1B
C6018	A	C	1B
C6019	A	C	1B
C6020	B	C	1B
C6021	A	C	1A
C6022	A	C	1A
C6023	B	C	1A
C6024	A	C	1B
C6025	B	C	1A
C6026	B	C	2A
C6027	B	C	2B
C6028	B	C	2B
C6029	B	C	2B
C6030	B	C	2B
C6031	A	C	2D
C6032	B	C	2D
C6033	A	C	2D
C6034	B	C	2D
C6035	A	C	2D
C6036	B	C	2D
C6037	B	C	1C
C6038	A	C	1B
C6039	A	C	1B
C6040	B	C	1C
C6041	A	C	1C
C6042	B	C	1C
C6043	A	C	1C
C6044	A	C	1C
C6045	A	C	1D
C6046	B	C	1D
C6047	B	C	1D
C6048	B	C	1D
C6049	A	C	2B
C6050	A	C	2B
C6051	B	C	2B
C6054	A	C	2C
C6055	A	C	2C
C6056	B	C	2C
C6057	B	C	2B
C6058	B	C	2C
C6059	A	C	2D
C6060	A	C	2A
C6061	A	C	2B
C6062	B	C	2B
C6065	A	C	2C
C6066	B	C	1D
C6067	B	C	1D
C6068	A	C	1B
CONNECTOR			
CN601	A	C	2C
CIRCUIT PROTECTOR			
CP6001	B	C	2C
CP6002	B	C	2B
CP6003	B	C	2C
DIODE			
D6001	B	C	2B
D6002	A	C	2D
D6003	B	C	1D
D6004	B	C	2C
D6005	B	C	1C
D6006	B	C	2A
D6007	B	C	2B
D6008	A	C	2D
IC			
IC6001	A	C	1A
IC6002	A	C	1B
COIL			
L6001	B	C	2A
L6002	B	C	2B

REF.No.	LOCATION		
L6003	A	C	1B
L6004	A	C	2B
L6007	A	C	1C
L6008	A	C	1D
L6009	A	C	1D
L6010	A	C	1C
L6011	A	C	1B
L6012	A	C	2C
L6013	A	C	2B
L6014	A	C	2C
L6015	A	C	2B
TRANSISTOR			
Q6001	A	C	2A
Q6002	A	C	2B
Q6003	B	C	2B
Q6004	B	C	2B
Q6005	B	C	2C
Q6006	B	C	1D
Q6007	B	C	1C
Q6008	B	C	1C
Q6009	A	C	1C
Q6010	B	C	2C
Q6011	B	C	2C
Q6012	A	C	1B
Q6013	A	C	1B
Q6014	A	C	1B
Q6015	A	C	2C
RESISTOR			
R6001	A	C	1A
R6002	A	C	1A
R6003	B	C	1A
R6004	B	C	1A
R6005	A	C	1A
R6006	A	C	1A
R6007	A	C	1A
R6008	A	C	1A
R6009	B	C	1A
R6010	A	C	1A
R6011	A	C	1A
R6012	A	C	1A
R6013	A	C	1A
R6014	A	C	1A
R6015	A	C	1A
R6016	A	C	1A
R6017	B	C	1A
R6018	B	C	1A
R6019	B	C	1A
R6020	A	C	1B
R6021	A	C	1B
R6022	A	C	1B
R6023	A	C	1B
R6024	A	C	1B
R6025	A	C	1B
R6026	A	C	1B
R6027	A	C	1B
R6028	A	C	1B
R6029	A	C	1B
R6030	A	C	1B
R6031	A	C	1B
R6032	B	C	1B
R6033	B	C	1A
R6034	A	C	1A
R6035	A	C	1A
R6036	A	C	1B
R6037	A	C	1C
R6038	B	C	1C
R6039	A	C	1C
R6040	A	C	1C
R6041	A	C	1C
R6042	A	C	1B
R6044	B	C	1C
R6046	B	C	2D
R6047	A	C	2D
R6048	A	C	2D
R6050	A	C	1C
R6051	A	C	2C
R6052	A	C	2D
OTHER			
T6001	A	C	2D

VOLTAGECHART <DC/DC>

MODE PIN NO.	REC	PLAY
IC6001		
1	5.5	5.6
2	7.1	6.9
3	6.0	6.0
4	6.5	6.5
5	5.4	5.4
6	7.0	7.0
7	6.0	6.0
8	1.5	1.4
9	2	2.0
10	0	0
11	0	0
12	0.9	0.9
13	2.6	2.8
14	0.9	0.9
15	0	0
16	0	0
17	0.8	0.7
18	2.7	2.6
19	1.4	1.5
20	1.2	1.1
21	0.4	0.4
22	1.3	1.3
23	0	0
24	1.4	1.4
25	0	0
26	1.9	2.2
27	1.5	1.5
28	6.6	6.6
29	6.6	6.7
30	6.6	6.7
31	1.2	1.2
32	1.1	1.1
33	1.5	1.5
34	4.2	4.2
35	2.6	2.6
36	1.1	1.1
37	1.3	1.3
38	2	1.5
39	1.0	1.0
40	1.5	1.5
41	2.2	2.2
42	6.7	5.9
43	6.7	6.6
44	5.1	6.7
45	6.3	5.1
46	5.9	6.2
47	6.2	5.9
48	4.5	6.2
49	4.5	4.5
50	6.0	6.0
51	6.6	6.8
52	5.9	5.9
53	0	0
54	6.5	6.5
55	4.7	-4.7
56	6.1	6.1
57	6.1	6.1
58	4.7	4.6
59	6.4	6.4
60	-0.4	0.7
61	0	0
62	5.9	5.8
63	6.7	-6.7
64	6.5	6.5
Q6001		
E	6.7	6.7
C	2.2	2.3
B	6.5	6.5
Q6002		
E	6.7	6.7
C	1.4	1.4
B	6.5	6.5
Q6003		
E	6.6	6.6
C	4.8	4.9
B	6	6.1
Q6004		
G	0.7	0.7
D	4.8	4.8
S	0	0
Q6005		
E	6.6	6.6
C	0	0
B	6.1	6.1

MODE PIN NO.	REC	PLAY
Q6006		
E	6.6	6.6
C	5.9	5.8
B	6.0	6.0
Q6007		
E	0	0
C	6.6	6.6
B	-3.4	-3.4
Q6008		
E	6.6	6.6
C	6.7	6.6
B	6.5	6.5
Q6009		
E	0	0
C	0	0
B	-3.7	-0.9
Q6010		
E	6.6	6.6
C	3.1	3.1
B	6.2	6.2
Q6011		
G	1.8	1.9
D	3.1	3.1
S	0	0
Q6012		
E	6.6	6.6
C	6.6	6.6
B	0	0
Q6013		
E	0	0
C	0	0
B	2.2	2.6
Q6014		
E	0	0
C	0	0
B	2.7	2.5

4.26 MDA SCHEMATIC DIAGRAM

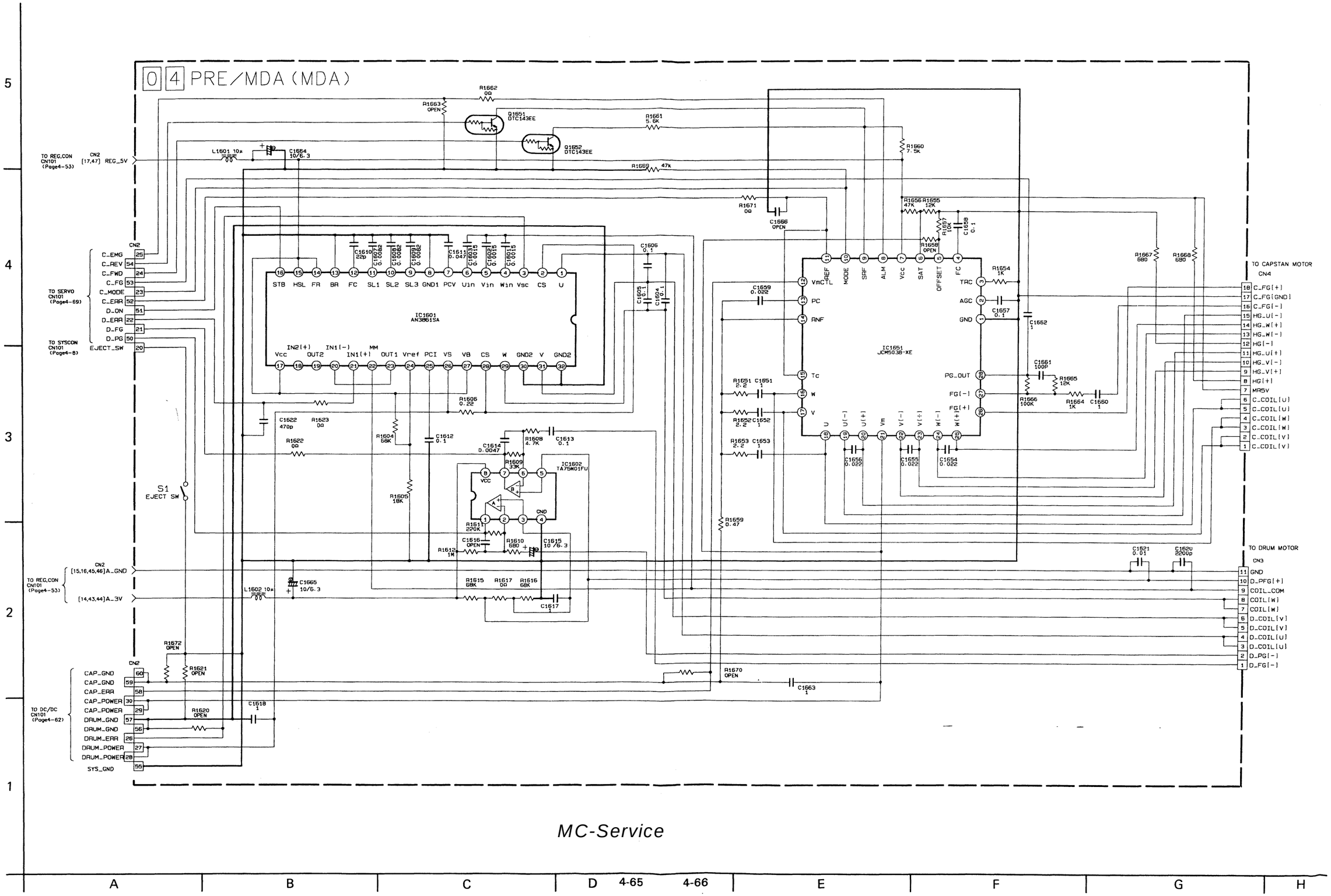

MC-Service

V20955/DRUCK22

4.27 PRE/MDA CIRCUIT BOARD

FOIL SIDE (B)

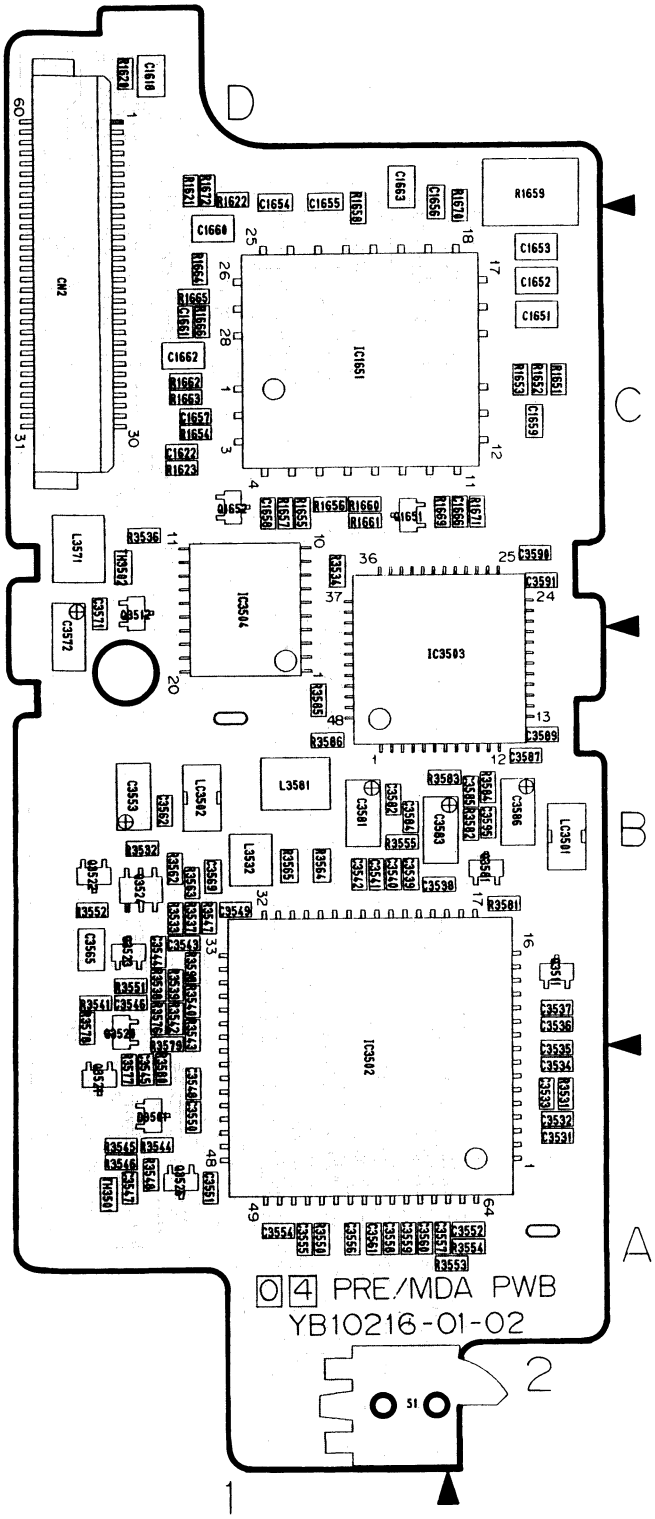

COMPONENT PARTS LOCATION GUIDE (PRE/MDA)

REF.No.	LOCATION		
CAPACITOR			
C1601	A	C	1C
C1602	A	C	1C
C1603	A	C	1C
C1604	A	C	2C
C1605	A	C	1C
C1606	A	C	2C
C1607	A	C	1C
C1608	A	C	1C
C1609	A	C	1C
C1610	A	C	1C
C1611	A	C	1C
C1612	A	C	1C
C1613	A	C	1D
C1614	A	C	1C
C1615	A	C	1C
C1616	A	C	1C
C1617	A	C	1D
C1618	B	C	1D
C1620	A	C	1C
C1621	A	C	1C
C1622	B	C	1C
C1651	B	C	2C
C1652	B	C	2C
C1653	B	C	2C
C1654	B	C	1D
C1655	B	C	1D
C1656	B	C	1D
C1657	B	C	1C
C1658	B	C	1C
C1659	B	C	2C
C1660	B	C	1C
C1661	B	C	1C
C1662	B	C	1C
C1663	B	C	1D
C1664	A	C	1C
C1665	A	C	1C
C1666	B	C	2C
C3501	A	C	2A
C3502	A	C	1A
C3504	A	C	2B
C3505	A	C	1A
C3506	A	C	1B
C3507	A	C	1B
C3508	A	C	1A
C3509	A	C	1A
C3510	A	C	1B
C3511	A	C	1B
C3512	A	C	1B
C3513	A	C	1B
C3514	A	C	1B
C3515	A	C	1B
C3516	A	C	2B
C3517	A	C	2B
C3518	A	C	2B
C3519	A	C	2B
C3520	A	C	2A
C3521	A	C	2A
C3522	A	C	2B
C3523	A	C	1A
C3524	A	C	1A
C3525	A	C	2B
C3526	A	C	1A
C3527	A	C	2A
C3528	A	C	1A
C3529	A	C	1B
C3531	B	C	2A
C3532	B	C	2A
C3533	B	C	2A
C3534	B	C	2A
C3535	B	C	2A
C3536	B	C	2B
C3537	B	C	2B
C3538	B	C	1B
C3539	B	C	1B
C3540	B	C	1B
C3541	B	C	1B
C3542	B	C	1B
C3543	B	C	1B
C3544	B	C	1B
C3545	B	C	1A
C3546	B	C	1B
C3547	B	C	1A
C3548	B	C	1A
C3549	B	C	1B
C3550	B	C	1A
C3551	B	C	1A
C3552	B	C	2A
C3553	B	C	1B
C3554	B	C	1A
C3555	B	C	1A
C3556	B	C	1A
C3557	B	C	1A
C3558	B	C	1A
C3559	B	C	1A
C3560	B	C	1A
C3561	B	C	1A
C3562	B	C	1B
C3563	A	C	1A
C3564	A	C	1A
C3565	B	C	1B
C3566	A	C	1C
C3567	A	C	1C

REF.No.	LOCATION		
C3568	A	C	2A
C3569	B	C	1B
C3571	B	C	1C
C3572	B	C	1B
C3575	A	C	1B
C3576	A	C	1B
C3581	B	C	1B
C3582	B	C	1B
C3583	B	C	1B
C3584	B	C	1B
C3585	B	C	2B
C3586	B	C	2B
C3587	B	C	2B
C3589	B	C	2B
C3590	B	C	2C
C3591	B	C	2C
C3592	A	C	2C
C3595	B	C	2B
CONNECTOR			
CN1	A	C	1B
CN2	B	C	1C
CN3	A	C	2C
CN4	A	C	1C
DIODE			
D3501	B	C	1A
IC			
IC1601	A	C	1C
IC1602	A	C	1C
IC1651	B	C	1C
IC3501	A	C	1B
IC3502	B	C	1A
IC3503	B	C	1B
IC3504	B	C	1C
COIL			
L1601	A	C	1C
L1602	A	C	1C
L3501	A	C	1B
L3503	A	C	1A
L3504	A	C	1B
L3505	A	C	1B
L3506	A	C	1A
L3507	A	C	1B
L3508	A	C	2B
L3532	B	C	1B
L3571	B	C	1C
L3581	B	C	1B
L3583	A	C	2C
TRANSISTOR			
Q1651	B	C	1C
Q1652	B	C	1C
Q3501	A	C	1B
Q3502	A	C	1A
Q3503	A	C	1A
Q3504	A	C	1C
Q3505	A	C	1B
Q3506	A	C	1B
Q3507	A	C	1B
Q3508	A	C	1C
Q3509	A	C	1B
Q3510	A	C	2B
Q3511	B	C	2B
Q3512	B	C	1C
Q3513	A	C	1B
Q3520	B	C	1B
Q3521	B	C	1A
Q3522	B	C	1B
Q3523	B	C	1B
Q3524	B	C	1B
Q3525	B	C	1A
Q3581	B	C	2B
RESISTOR			
R1604	A	C	1C
R1605	A	C	1C
R1606	A	C	1C
R1608	A	C	1D
R1609	A	C	1C
R1610	A	C	1C
R1611	A	C	1C
R1612	A	C	1C
R1615	A	C	1C
R1616	A	C	1D
R1617	A	C	1C
R1620	B	C	1D
R1621	B	C	1D
R1622	B	C	1D
R1623	B	C	1C
R1651	B	C	2C
R1652	B	C	2C
R1653	B	C	2C
R1654	B	C	1C
R1655	B	C	1C
R1656	B	C	1C
R1657	B	C	1C
R1658	B	C	1D
R1659	B	C	2D
R1660	B	C	1C
R1661	B	C	1C

REF.No.	LOCATION		
R1662	B	C	1C
R1663	B	C	1C
R1664	B	C	1C
R1665	B	C	1C
R1666	B	C	1C
R1667	A	C	1D
R1668	A	C	1C
R1669	B	C	1C
R1670	B	C	2D
R1671	B	C	2C
R1672	B	C	1D
R3501	A	C	2A
R3502	A	C	2A
R3503	A	C	1A
R3505	A	C	1A
R3506	A	C	1A
R3507	A	C	1A
R3508	A	C	1A
R3509	A	C	1A
R3510	A	C	1A
R3511	A	C	1B
R3512	A	C	1B
R3513	A	C	1B
R3514	A	C	1B
R3515	A	C	1B
R3516	A	C	1B
R3517	A	C	1B
R3518	A	C	2B
R3519	A	C	1B
R3520	A	C	1B
R3521	A	C	2A
R3522	A	C	2B
R3525	A	C	2B
R3527	A	C	2A
R3529	A	C	1B
R3530	A	C	1B
R3531	B	C	2A
R3532	B	C	1B
R3533	B	C	1B
R3534	B	C	1C
R3535	A	C	1B
R3536	B	C	1C
R3537	B	C	1B
R3538	B	C	1B
R3539	B	C	1B
R3540	B	C	1B
R3541	B	C	1B
R3542	B	C	1B
R3543	B	C	1B
R3544	B	C	1A
R3545	B	C	1A
R3546	B	C	1A
R3547	B	C	1B
R3548	B	C	1A
R3550	B	C	1A
R3551	B	C	1B
R3552	B	C	1B
R3553	B	C	2A
R3554	B	C	2A
R3555	B	C	1B
R3556	A	C	1B
R3562	B	C	1B
R3563	B	C	1B
R3564	B	C	1B
R3565	B	C	1B
R3576	B	C	1B
R3577	B	C	1A
R3578	B	C	1B
R3579	B	C	1B
R3580	B	C	1A
R3581	B	C	2B
R3582	B	C	2B
R3583	B	C	1B
R3584	B	C	2B
R3585	B	C	1B
R3586	B	C	1B
R3593	A	C	1C
R3596	A	C	1C
R3598	B	C	1B
R3599	A	C	1C
OTHER			
LC3501	B	C	2B
LC3502	B	C	1B
S1	B	C	1A
TH3501	B	C	1A
TH3502	B	C	1C

COMPONENT SIDE (A)

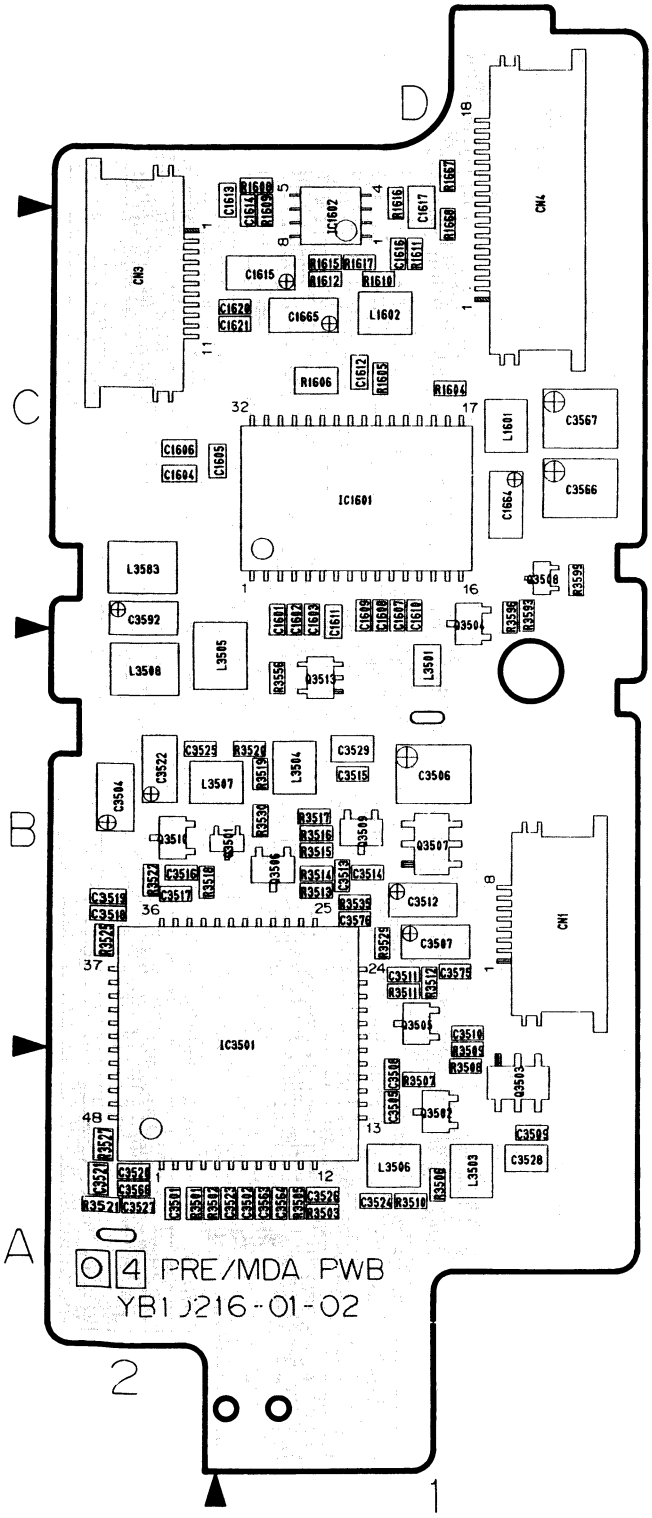

COMPONENT PARTS LOCATION GUIDE (PRE/MDA)

REF.No.	LOCATION		
CAPACITOR			
C1601	A	C	1C
C1602	A	C	1C
C1603	A	C	1C
C1604	A	C	2C
C1605	A	C	1C
C1606	A	C	2C
C1607	A	C	1C
C1608	A	C	1C
C1609	A	C	1C
C1610	A	C	1C
C1611	A	C	1C
C1612	A	C	1C
C1613	A	C	1D
C1614	A	C	1C
C1615	A	C	1C
C1616	A	C	1C
C1617	A	C	1D
C1618	B	C	1D
C1620	A	C	1C
C1621	A	C	1C
C1622	B	C	1C
C1651	B	C	2C
C1652	B	C	2C
C1653	B	C	2C
C1654	B	C	1D
C1655	B	C	1D
C1656	B	C	1D
C1657	B	C	1C
C1658	B	C	1C
C1659	B	C	2C
C1660	B	C	1C
C1661	B	C	1C
C1662	B	C	1C
C1663	B	C	1D
C1664	A	C	1C
C1665	A	C	1C
C1666	B	C	2C
C3501	A	C	2A
C3502	A	C	1A
C3504	A	C	2B
C3505	A	C	1A
C3506	A	C	1B
C3507	A	C	1B
C3508	A	C	1A
C3509	A	C	1A
C3510	A	C	1B
C3511	A	C	1B
C3512	A	C	1B
C3513	A	C	1B
C3514	A	C	1B
C3515	A	C	1B
C3516	A	C	2B
C3517	A	C	2B
C3518	A	C	2B
C3519	A	C	2B
C3520	A	C	2A
C3521	A	C	2A
C3522	A	C	2B
C3523	A	C	1A
C3524	A	C	1A
C3525	A	C	2B
C3526	A	C	1A
C3527	A	C	2A
C3528	A	C	1A
C3529	A	C	1B
C3531	B	C	2A
C3532	B	C	2A
C3533	B	C	2A
C3534	B	C	2A
C3535	B	C	2A
C3536	B	C	2B
C3537	B	C	2B
C3538	B	C	1B
C3539	B	C	1B
C3540	B	C	1B
C3541	B	C	1B
C3542	B	C	1B
C3543	B	C	1B
C3544	B	C	1B
C3545	B	C	1A
C3546	B	C	1B
C3547	B	C	1A
C3548	B	C	1A
C3549	B	C	1B
C3550	B	C	1A
C3551	B	C	1A
C3552	B	C	2A
C3553	B	C	1B
C3554	B	C	1A
C3555	B	C	1A
C3556	B	C	1A
C3557	B	C	1A
C3558	B	C	1A
C3559	B	C	1A
C3560	B	C	1A
C3561	B	C	1A
C3562	B	C	1B
C3563	A	C	1A
C3564	A	C	1A
C3565	B	C	1B
C3566	A	C	1C
C3567	A	C	1C

REF.No.	LOCATION		
C3568	A	C	2A
C3569	B	C	1B
C3571	B	C	1C
C3572	B	C	1B
C3575	A	C	1B
C3576	A	C	1B
C3581	B	C	1B
C3582	B	C	1B
C3583	B	C	1B
C3584	B	C	1B
C3585	B	C	2B
C3586	B	C	2B
C3587	B	C	2B
C3589	B	C	2B
C3590	B	C	2C
C3591	B	C	2C
C3592	A	C	2C
C3595	B	C	2B
CONNECTOR			
CN1	A	C	1B
CN2	B	C	1C
CN3	A	C	2C
CN4	A	C	1C
DIODE			
D3501	B	C	1A
IC			
IC1601	A	C	1C
IC1602	A	C	1C
IC1651	B	C	1C
IC3501	A	C	1B
IC3502	B	C	1A
IC3503	B	C	1B
IC3504	B	C	1C
COIL			
L1601	A	C	1C
L1602	A	C	1C
L3501	A	C	1B
L3503	A	C	1A
L3504	A	C	1B
L3505	A	C	1B
L3506	A	C	1A
L3507	A	C	1B
L3508	A	C	2B
L3532	B	C	1B
L3571	B	C	1C
L3581	B	C	1B
L3583	A	C	2C
TRANSISTOR			
Q1651	B	C	1C
Q1652	B	C	1C
Q3501	A	C	1B
Q3502	A	C	1A
Q3503	A	C	1A
Q3504	A	C	1C
Q3505	A	C	1B
Q3506	A	C	1B
Q3507	A	C	1B
Q3508	A	C	1C
Q3509	A	C	1B
Q3510	A	C	2B
Q3511	B	C	2B
Q3512	B	C	1C
Q3513	A	C	1B
Q3520	B	C	1B
Q3521	B	C	1A
Q3522	B	C	1B
Q3523	B	C	1B
Q3524	B	C	1B
Q3525	B	C	1A
Q3581	B	C	2B
RESISTOR			
R1604	A	C	1C
R1605	A	C	1C
R1606	A	C	1C
R1608	A	C	1D
R1609	A	C	1C
R1610	A	C	1C
R1611	A	C	1C
R1612	A	C	1C
R1615	A	C	1C
R1616	A	C	1D
R1617	A	C	1C
R1620	B	C	1D
R1621	B	C	1D
R1622	B	C	1D
R1623	B	C	1C
R1651	B	C	2C
R1652	B	C	2C
R1653	B	C	2C
R1654	B	C	1C
R1655	B	C	1C
R1656	B	C	1C
R1657	B	C	1C
R1658	B	C	1D
R1659	B	C	2D
R1660	B	C	1C
R1661	B	C	1C

REF.No.	LOCATION		
R1662	B	C	1C
R1663	B	C	1C
R1664	B	C	1C
R1665	B	C	1C
R1666	B	C	1C
R1667	A	C	1D
R1668	A	C	1C
R1669	B	C	1C
R1670	B	C	2D
R1671	B	C	2C
R1672	B	C	1D
R3501	A	C	2A
R3502	A	C	2A
R3503	A	C	1A
R3505	A	C	1A
R3506	A	C	1A
R3507	A	C	1A
R3508	A	C	1A
R3509	A	C	1A
R3510	A	C	1A
R3511	A	C	1B
R3512	A	C	1B
R3513	A	C	1B
R3514	A	C	1B
R3515	A	C	1B
R3516	A	C	1B
R3517	A	C	1B
R3518	A	C	2B
R3519	A	C	1B
R3520	A	C	1B
R3521	A	C	2A
R3522	A	C	2B
R3525	A	C	2B
R3527	A	C	2A
R3529	A	C	1B
R3530	A	C	1B
R3531	B	C	2A
R3532	B	C	1B
R3533	B	C	1B
R3534	B	C	1C
R3535	A	C	1B
R3536	B	C	1C
R3537	B	C	1B
R3538	B	C	1B
R3539	B	C	1B
R3540	B	C	1B
R3541	B	C	1B
R3542	B	C	1B
R3543	B	C	1B
R3544	B	C	1A
R3545	B	C	1A
R3546	B	C	1A
R3547	B	C	1B
R3548	B	C	1A
R3550	B	C	1A
R3551	B	C	1B
R3552	B	C	1B
R3553	B	C	2A
R3554	B	C	2A
R3555	B	C	1B
R3556	A	C	1B
R3562	B	C	1B
R3563	B	C	1B
R3564	B	C	1B
R3565	B	C	1B
R3576	B	C	1B
R3577	B	C	1A
R3578	B	C	1B
R3579	B	C	1B
R3580	B	C	1A
R3581	B	C	2B
R3582	B	C	2B
R3583	B	C	1B
R3584	B	C	2B
R3585	B	C	1B
R3586	B	C	1B
R3593	A	C	1C
R3596	A	C	1C
R3598	B	C	1B
R3599	A	C	1C
OTHER			
LC3501	B	C	2B
LC3502	B	C	1B
S1	B	C	1A
TH3501	B	C	1A
TH3502	B	C	1C

4.28 PRE/REC SCHEMATIC DIAGRAM

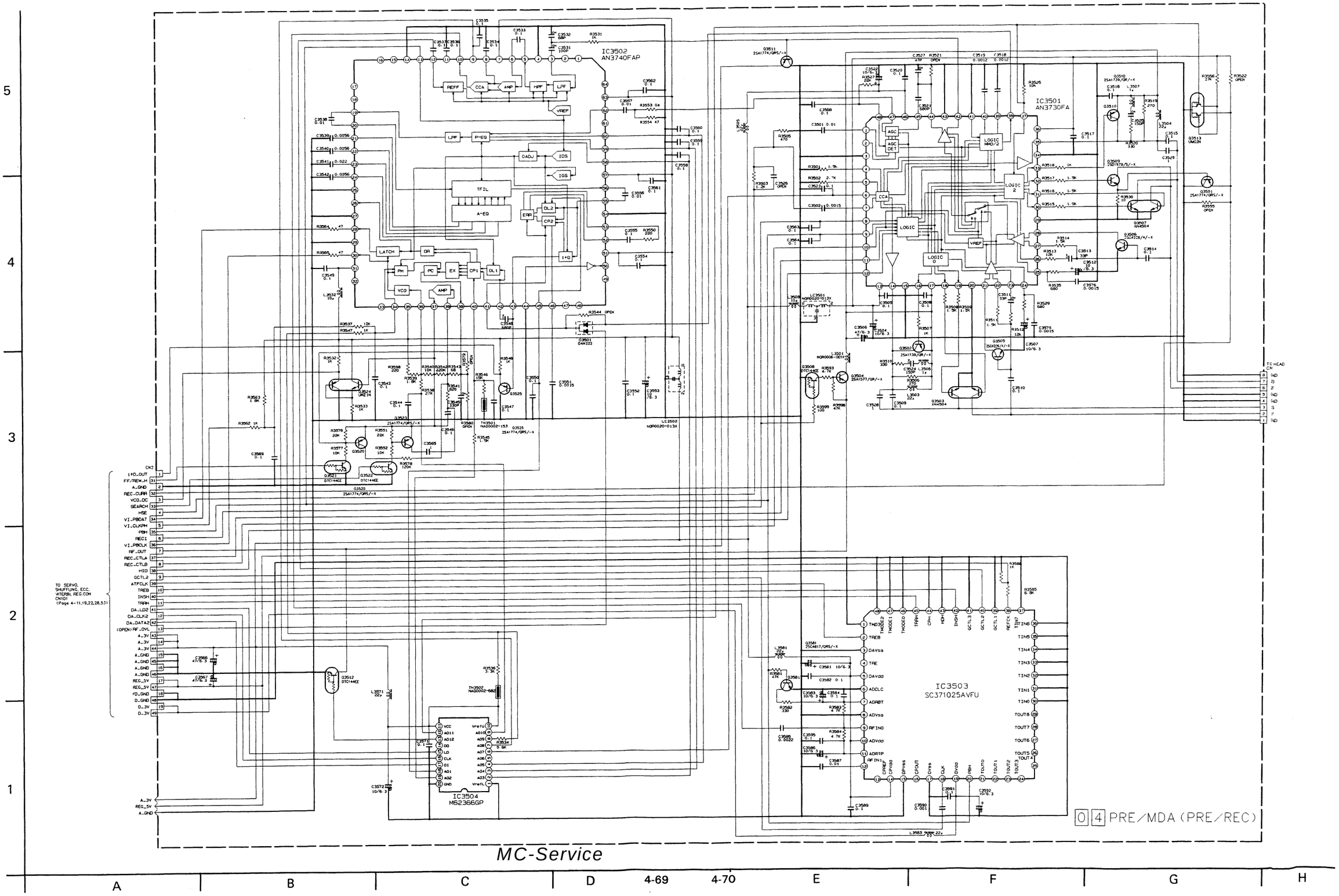

V20955/DRUCK23

4.29 MONITOR SCHEMATIC DIAGRAM

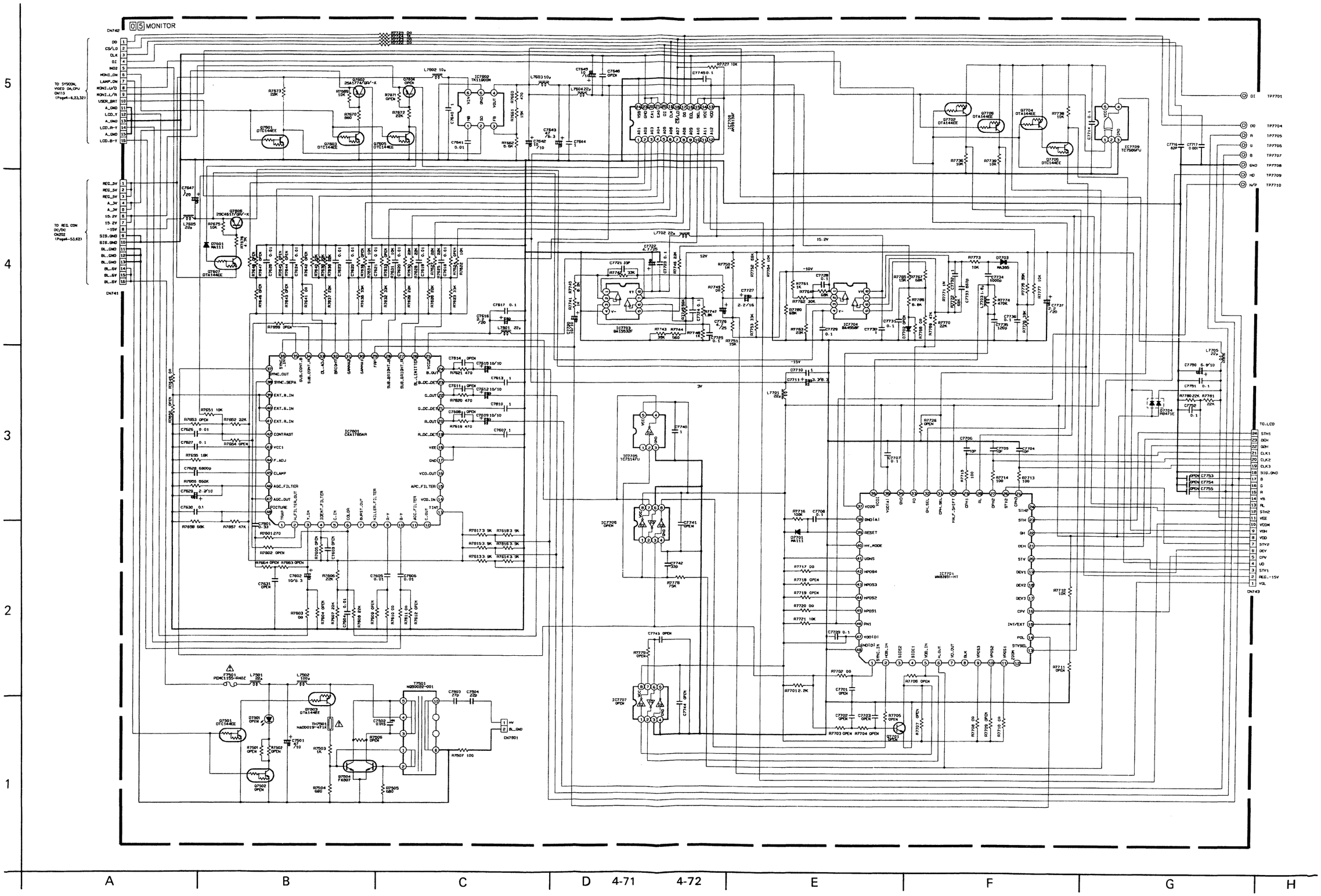

4.30 MONITOR CIRCUIT BOARD

FOIL SIDE (B)

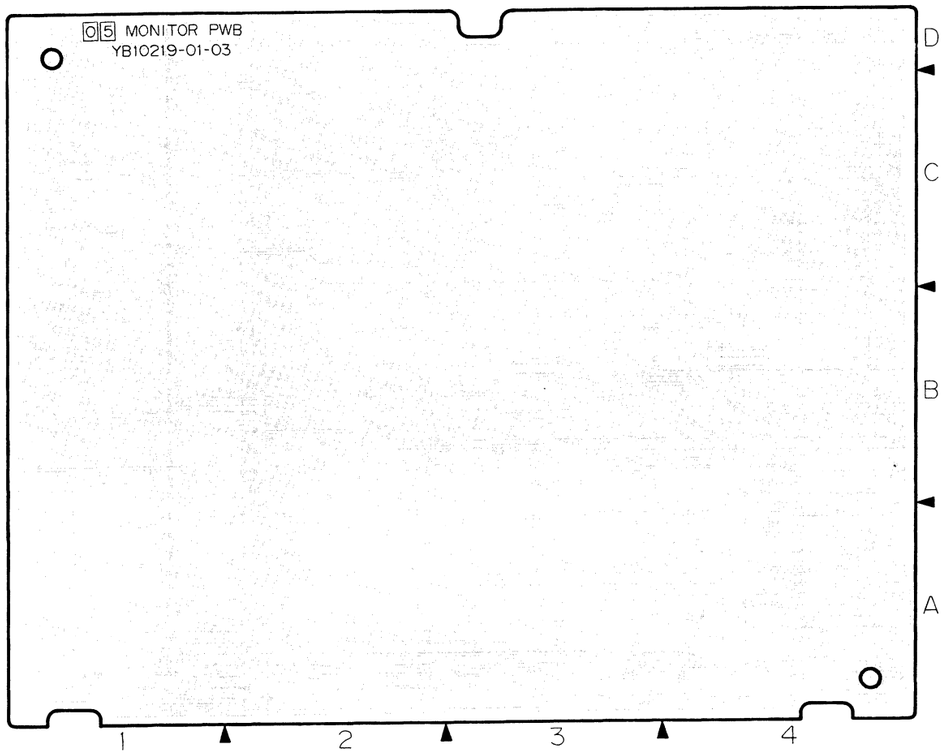

COMPONENT SIDE (A)

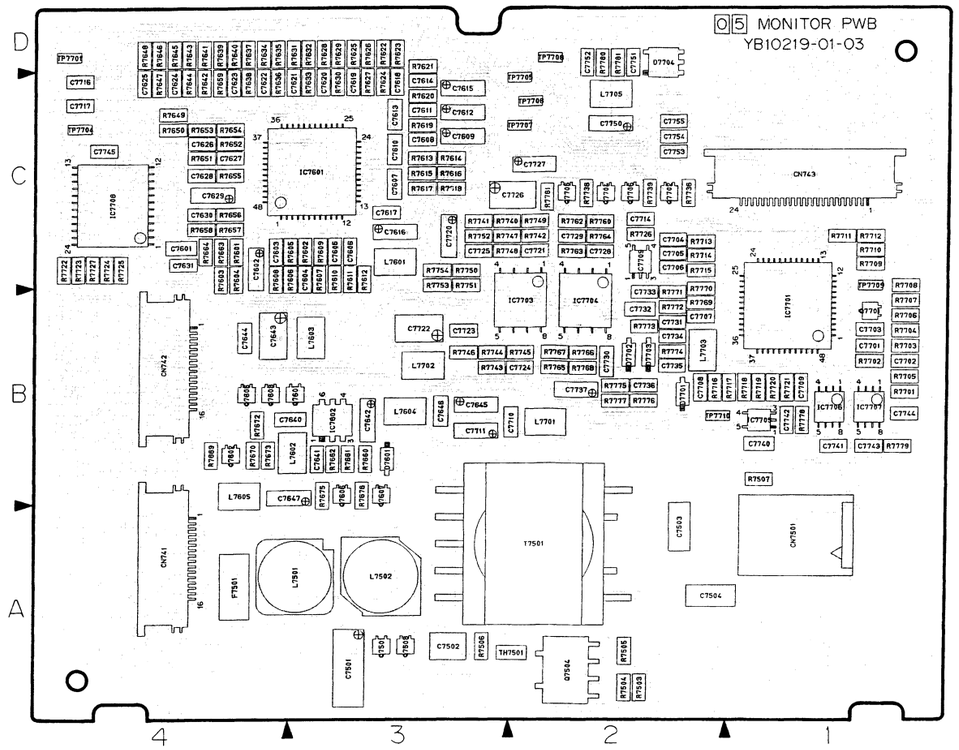

COMPONENT PARTS LOCATION GUIDE (MONITOR)

REF.No.	LOCATION
CAPACITOR	
C7501	A C 3A
C7502	A C 3A
C7503	A C 2A
C7504	A C 2A
C7601	A C 4C
C7602	A C 4C
C7603	A C 4C
C7604	A C 3C
C7605	A C 3C
C7606	A C 3C
C7607	A C 3C
C7608	A C 3C
C7609	A C 3C
C7610	A C 3C
C7611	A C 3C
C7612	A C 3C
C7613	A C 3C
C7614	A C 3C
C7615	A C 3C
C7616	A C 3C
C7617	A C 3C
C7618	A C 3C
C7619	A C 3C
C7620	A C 3C
C7621	A C 3C
C7622	A C 4C
C7623	A C 4C
C7624	A C 4C
C7625	A C 4C
C7626	A C 4C
C7627	A C 4C
C7628	A C 4C
C7629	A C 4C
C7630	A C 4C
C7631	A C 4C
C7640	A C 3B
C7641	A C 3B
C7642	A C 3B
C7643	A C 4B
C7644	A C 4B
C7645	A C 3B
C7646	A C 3B
C7647	A C 3B
C7701	A C 1B
C7702	A C 1B
C7703	A C 1B
C7704	A C 2C
C7705	A C 2C
C7706	A C 2C
C7707	A C 2B
C7708	A C 2B
C7709	A C 1B
C7710	A C 2B
C7711	A C 3B
C7714	A C 2C
C7716	A C 4C
C7717	A C 4C
C7720	A C 3C
C7721	A C 2C
C7722	A C 3B
C7723	A C 3B
C7724	A C 2B
C7725	A C 3C
C7726	A C 2C
C7727	A C 2C
C7728	A C 2C
C7729	A C 2C
C7730	A C 2B
C7731	A C 2B
C7732	A C 2B
C7733	A C 2B
C7734	A C 2B
C7735	A C 2B
C7736	A C 2B
C7737	A C 2B
C7740	A C 1B
C7741	A C 1B
C7742	A C 1B
C7743	A C 1B
C7744	A C 1B
C7745	A C 4C
C7750	A C 2C
C7751	A C 2D
C7752	A C 2D
C7753	A C 2C
C7754	A C 2C
C7755	A C 2C
CONNECTOR	
CN741	A C 4A
CN742	A C 4B
CN743	A C 1C
CN7501	A C 1A
DIODE	
D7601	A C 3B
D7701	A C 2B
D7702	A C 2B
D7703	A C 2B
D7704	A C 2D
IC	
IC7601	A C 3C
IC7602	A C 3B
IC7701	A C 1B
IC7703	A C 2B
IC7704	A C 2B
IC7705	A C 1B
IC7706	A C 1B
IC7707	A C 1B
IC7708	A C 4C
IC7709	A C 2C
COIL	
L7501	A C 3A
L7502	A C 3A
L7601	A C 3C
L7602	A C 3B
L7603	A C 3B
L7604	A C 3B
L7605	A C 4B
L7701	A C 2B
L7702	A C 3B
L7703	A C 2B
L7705	A C 2C
TRANSISTOR	
Q7501	A C 3A
Q7503	A C 3A
Q7504	A C 2A
Q7601	A C 3B
Q7602	A C 4B
Q7603	A C 4B
Q7605	A C 4B
Q7606	A C 3B
Q7607	A C 3B
Q7701	A C 1B
Q7702	A C 2C
Q7704	A C 2C
Q7705	A C 2C
Q7706	A C 2C
RESISTOR	
R7503	A C 2A
R7504	A C 2A
R7505	A C 2A
R7506	A C 3A
R7507	A C 1B
R7601	A C 4C
R7602	A C 3C
R7603	A C 4C
R7604	A C 4C
R7605	A C 3C
R7606	A C 3C
R7607	A C 3C
R7608	A C 4C
R7609	A C 3C
R7610	A C 3C
R7611	A C 3C
R7612	A C 3C
R7613	A C 3C
R7614	A C 3C
R7615	A C 3C
R7616	A C 3C
R7617	A C 3C
R7618	A C 3C
R7619	A C 3C
R7620	A C 3C
R7621	A C 3D
R7622	A C 3D
R7623	A C 3D
R7624	A C 3C
R7625	A C 3D
R7626	A C 3D
R7627	A C 3C
R7628	A C 3D
R7629	A C 3D
R7630	A C 3C
R7631	A C 3D
R7632	A C 3D
R7633	A C 3C
R7634	A C 4D
R7635	A C 4D
R7636	A C 4C
R7637	A C 4D
R7638	A C 4C
R7639	A C 4D
R7640	A C 4D
R7641	A C 4D
R7642	A C 4C
R7643	A C 4D
R7644	A C 4C
R7645	A C 4D
R7646	A C 4D
R7647	A C 4C
R7648	A C 4D
R7649	A C 4C
R7650	A C 4C
R7651	A C 4C
R7652	A C 4C
R7653	A C 4C
R7654	A C 4C
R7655	A C 4C
R7656	A C 4C
R7657	A C 4C
R7658	A C 4C
R7659	A C 4C
R7660	A C 3B
R7661	A C 3B
R7662	A C 3B
R7663	A C 4C
R7664	A C 4C
R7669	A C 4B
R7670	A C 4B
R7672	A C 4B
R7673	A C 4B
R7675	A C 3B
R7676	A C 3B
R7701	A C 1B
R7702	A C 1B
R7703	A C 1B
R7704	A C 1B
R7705	A C 1B
R7706	A C 1B
R7707	A C 1B
R7708	A C 1C
R7709	A C 1C
R7710	A C 1C
R7711	A C 1C
R7712	A C 1C
R7713	A C 2C
R7714	A C 2C
R7715	A C 2C
R7716	A C 2B
R7717	A C 1B
R7718	A C 1B
R7719	A C 1B
R7720	A C 1B
R7721	A C 1B
R7722	A C 4C
R7723	A C 4C
R7724	A C 4C
R7725	A C 4C
R7726	A C 2C
R7727	A C 4C
R7736	A C 2C
R7738	A C 2C
R7739	A C 2C
R7740	A C 3C
R7741	A C 3C
R7742	A C 2C
R7743	A C 3B
R7744	A C 3B
R7745	A C 2B
R7746	A C 3B
R7747	A C 3C
R7748	A C 3C
R7749	A C 2C
R7750	A C 3C
R7751	A C 3C
R7752	A C 3C
R7753	A C 3C
R7754	A C 3C
R7760	A C 2C
R7761	A C 2C
R7762	A C 2C
R7763	A C 2C
R7764	A C 2C
R7765	A C 2B
R7766	A C 2B
R7767	A C 2B
R7768	A C 2B
R7769	A C 2B
R7770	A C 2B
R7771	A C 2B
R7772	A C 2B
R7773	A C 2B
R7774	A C 2B
R7775	A C 2B
R7776	A C 2B
R7777	A C 2B
R7778	A C 1B
R7779	A C 1B
R7780	A C 2D
R7781	A C 2D
TEST POINT	
TP7701	A C 4D
TP7704	A C 4C
TP7705	A C 2C
TP7706	A C 2C
TP7707	A C 2C
TP7708	A C 2D
TP7709	A C 1C
TP7710	A C 2B
OTHER	
F7501	A C 4A
T7501	A C 2A
TH7501	A C 2A

4.31 CCD SCHEMATIC DIAGRAM

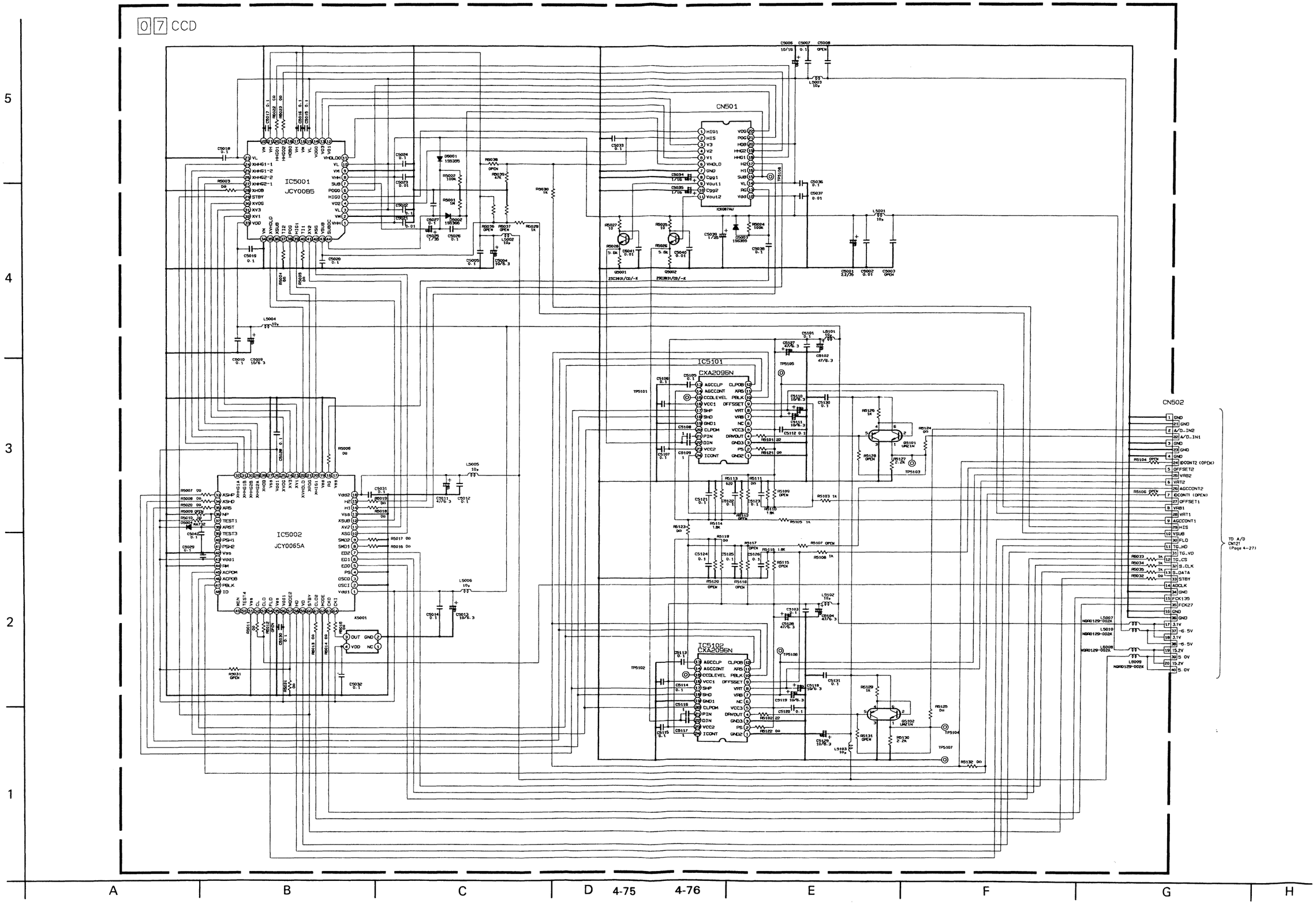

4.32 CCD CIRCUIT BOARD

FOIL SIDE (B)

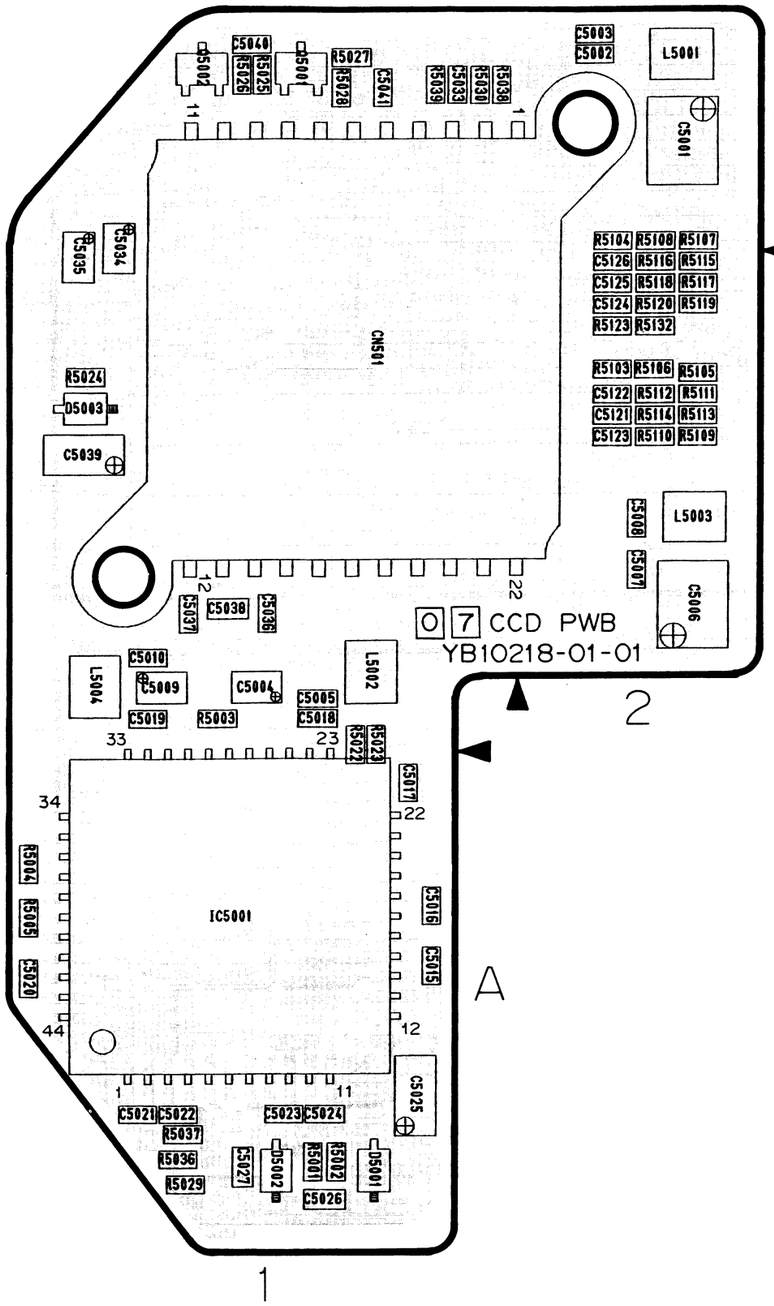

COMPONENT SIDE (A)

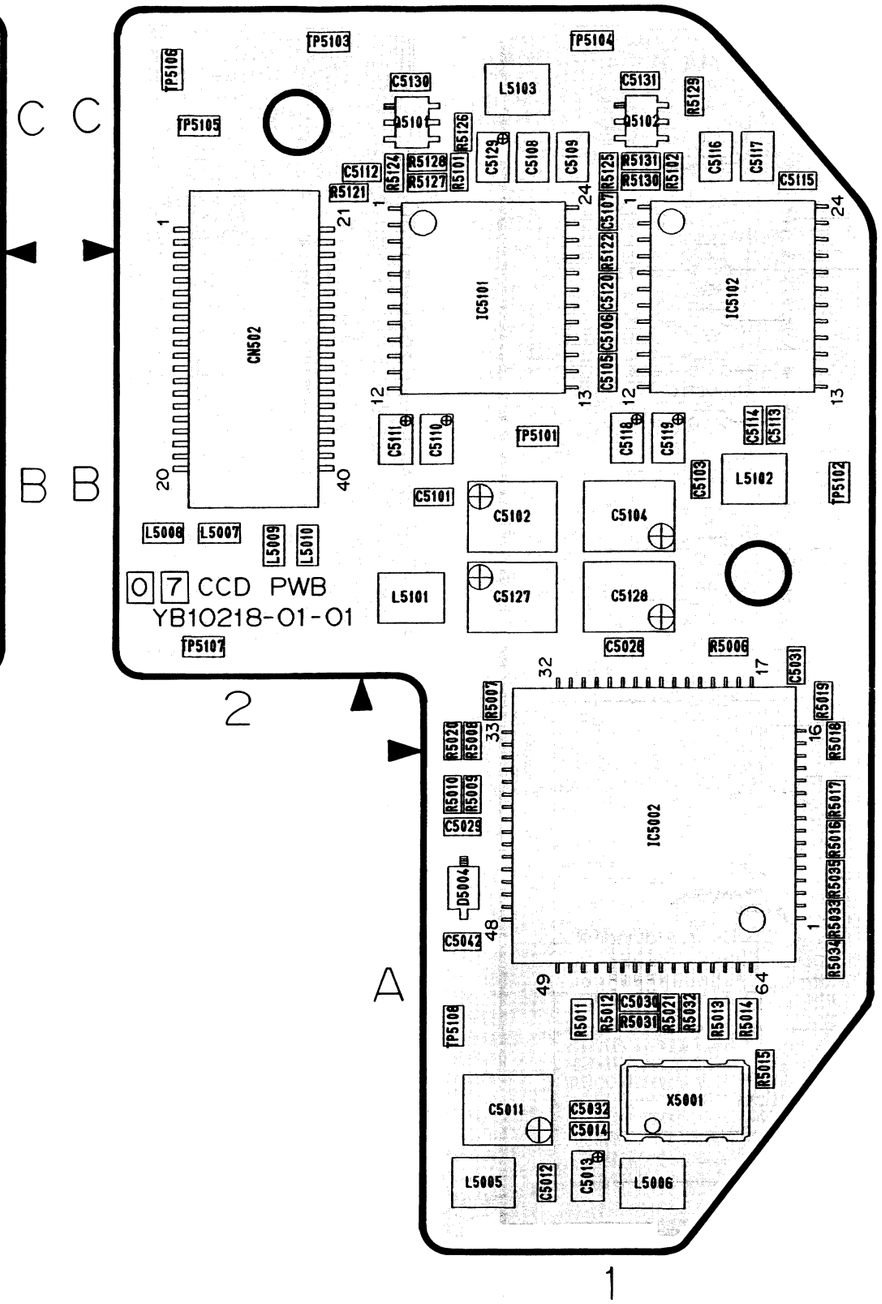

COMPONENT PARTS LOCATION GUIDE (CCD)

REF.No.	LOCATION		
CAPACITOR			
C5001	B	C	2C
C5002	B	C	2C
C5003	B	C	2C
C5004	B	C	1B
C5005	B	C	1B
C5006	B	C	2B
C5007	B	C	2B
C5008	B	C	2B
C5009	B	C	1B
C5010	B	C	1B
C5011	A	C	1A
C5012	A	C	1A
C5013	A	C	1A
C5014	A	C	1A
C5015	B	C	1A
C5016	B	C	1A
C5017	B	C	1A
C5018	B	C	1B
C5019	B	C	1B
C5020	B	C	1A
C5021	B	C	1A
C5022	B	C	1A
C5023	B	C	1A
C5024	B	C	1A
C5025	B	C	1A
C5026	B	C	1A
C5027	B	C	1A
C5028	A	C	1B
C5029	A	C	1A
C5030	A	C	1A
C5031	A	C	1B
C5032	A	C	1A
C5033	B	C	1C
C5034	B	C	1C
C5035	B	C	1B
C5036	B	C	1B
C5037	B	C	1B
C5038	B	C	1B
C5039	B	C	1B
C5040	B	C	1C
C5041	B	C	1C
C5042	A	C	1A
C5101	A	C	1B
C5102	A	C	1B
C5103	A	C	1B
C5104	A	C	1B
C5105	A	C	1B
C5106	A	C	1B
C5107	A	C	1C
C5108	A	C	1C
C5109	A	C	1C
C5110	A	C	1B
C5111	A	C	1B
C5112	A	C	1C
C5113	A	C	1B
C5114	A	C	1B
C5115	A	C	1C
C5116	A	C	1C
C5117	A	C	1C
C5118	A	C	1B
C5119	A	C	1B
C5120	A	C	1B
C5121	B	C	2B
C5122	B	C	2B
C5123	B	C	2B
C5124	B	C	2B
C5125	B	C	2B
C5126	B	C	2B
C5127	A	C	1B
C5128	A	C	1B
C5129	A	C	1C
C5130	A	C	1C
C5131	A	C	1C
CONNECTOR			
CN501	B	C	1B
CN502	A	C	2C

REF.No.	LOCATION		
DIODE			
D5001	B	C	1A
D5002	B	C	1A
D5003	B	C	1B
D5004	A	C	1A
IC			
IC5001	B	C	1A
IC5002	A	C	1A
IC5101	A	C	1B
IC5102	A	C	1B
COIL			
L5001	B	C	2C
L5002	B	C	1B
L5003	B	C	2B
L5004	B	C	1B
L5005	A	C	1A
L5006	A	C	1A
L5007	A	C	2B
L5008	A	C	2B
L5009	A	C	2B
L5010	A	C	2B
L5101	A	C	1B
L5102	A	C	1B
L5103	A	C	1C
TRANSISTOR			
Q5001	B	C	1C
Q5002	B	C	1C
Q5101	A	C	1C
Q5102	A	C	1C
RESISTOR			
R5001	B	C	1A
R5002	B	C	1A
R5003	B	C	1B
R5004	B	C	1A
R5005	B	C	1A
R5006	A	C	1B
R5007	A	C	1B
R5008	A	C	1B
R5009	A	C	1A
R5010	A	C	1A
R5011	A	C	1A
R5012	A	C	1A
R5013	A	C	1A
R5014	A	C	1A
R5015	A	C	1A
R5016	A	C	1A
R5017	A	C	1A
R5018	A	C	1B
R5019	A	C	1B
R5020	A	C	1B
R5021	A	C	1A
R5022	B	C	1B
R5023	B	C	1B
R5024	B	C	1B
R5025	B	C	1C
R5026	B	C	1C
R5027	B	C	1C
R5028	B	C	1C
R5029	B	C	1A
R5030	B	C	1C
R5031	A	C	1A
R5032	A	C	1A
R5033	A	C	1A
R5034	A	C	1A
R5035	A	C	1A
R5036	B	C	1A
R5037	B	C	1A
R5038	B	C	1C
R5039	B	C	1C
R5101	A	C	1C
R5102	A	C	1C
R5103	B	C	2B
R5104	B	C	2C
R5105	B	C	2B
R5106	B	C	2B
R5107	B	C	2C

REF.No.	LOCATION		
R5108	B	C	2C
R5109	B	C	2B
R5110	B	C	2B
R5111	B	C	2B
R5112	B	C	2B
R5113	B	C	2B
R5114	B	C	2B
R5115	B	C	2B
R5116	B	C	2B
R5117	B	C	2B
R5118	B	C	2B
R5119	B	C	2B
R5120	B	C	2B
R5121	A	C	2C
R5122	A	C	1B
R5123	B	C	2B
R5124	A	C	1C
R5125	A	C	1C
R5126	A	C	1C
R5127	A	C	1C
R5128	A	C	1C
R5129	A	C	1C
R5130	A	C	1C
R5131	A	C	1C
R5132	B	C	2B
TEST POINT			
TP5101	A	C	1B
TP5102	A	C	1B
TP5103	A	C	2C
TP5104	A	C	1C
TP5105	A	C	2C
TP5106	A	C	2C
TP5107	A	C	2B
TP5108	A	C	1A
OTHER			
X5001	A	C	1A

4.33 OPERATION (DECK), OPERATION (CAMERA) AND IR SCHEMATIC DIAGRAMS

NOTE : This schematic diagram is only for reference.
Avoid replacing individual parts.
Replace the entire unit only.

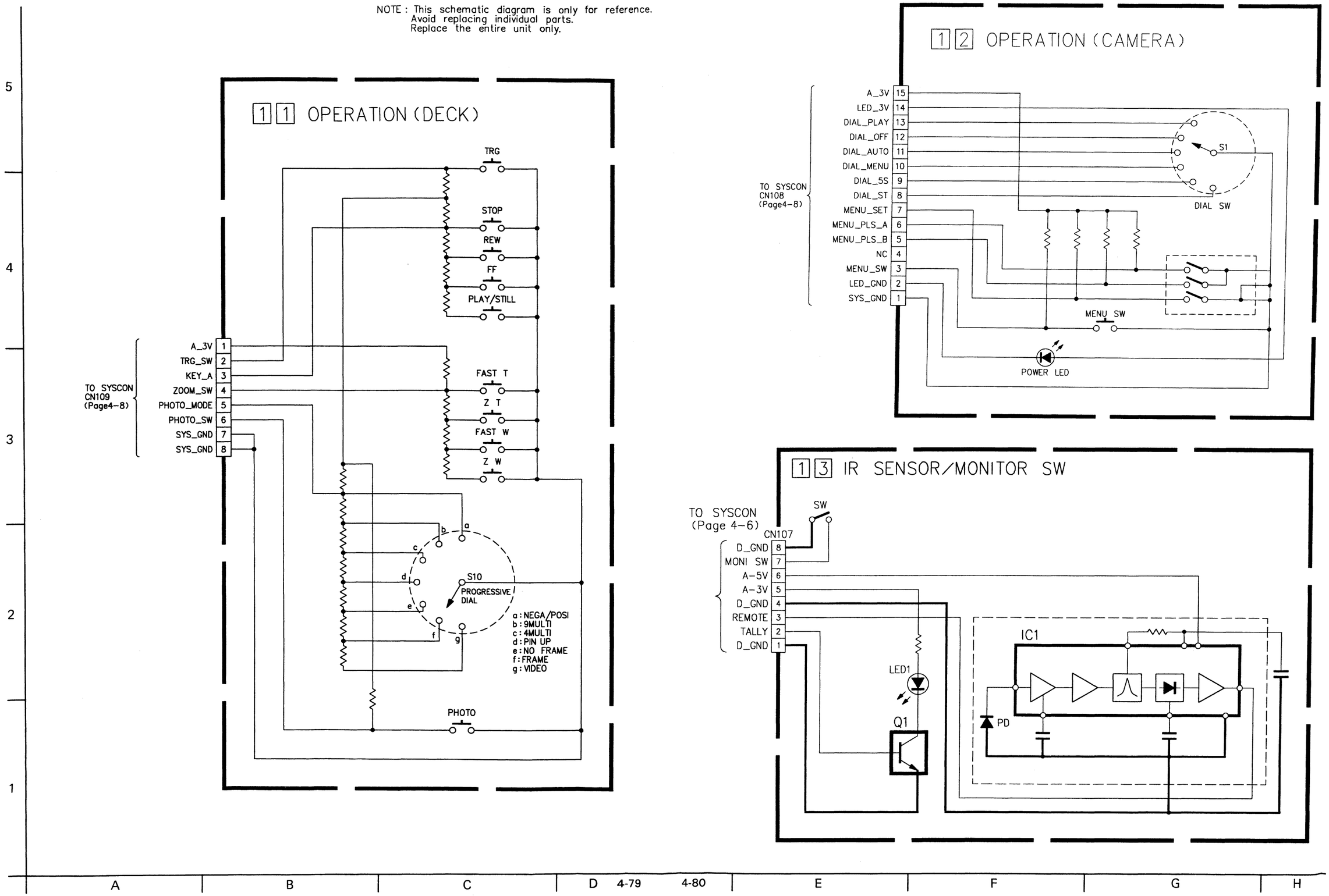

4.34 POWER SYSTEM BLOCK DIAGRAM

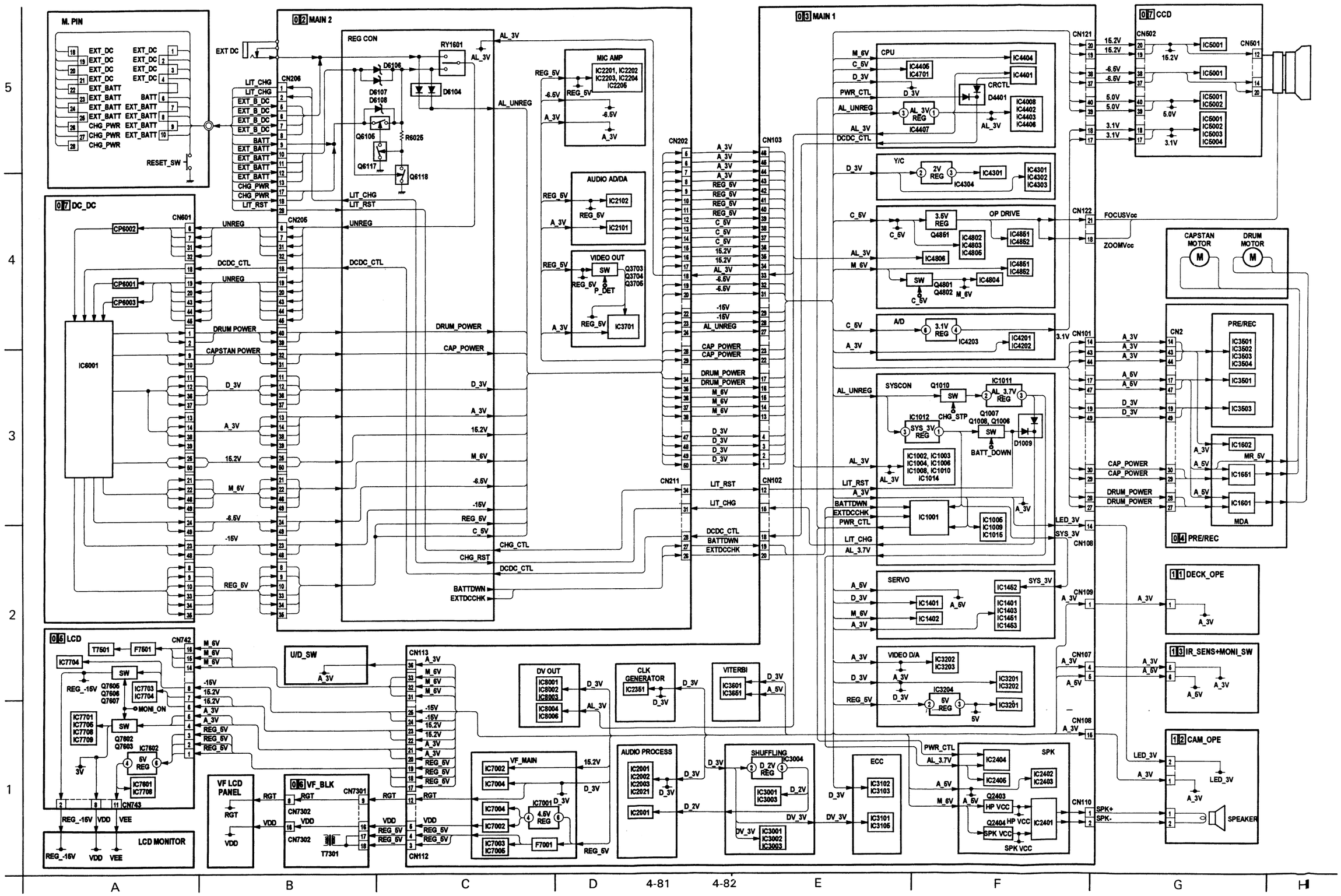

V20955/DRUCK29

4.35 VIDEO&AUDIO SYSTEM BLOCK DIAGRAM

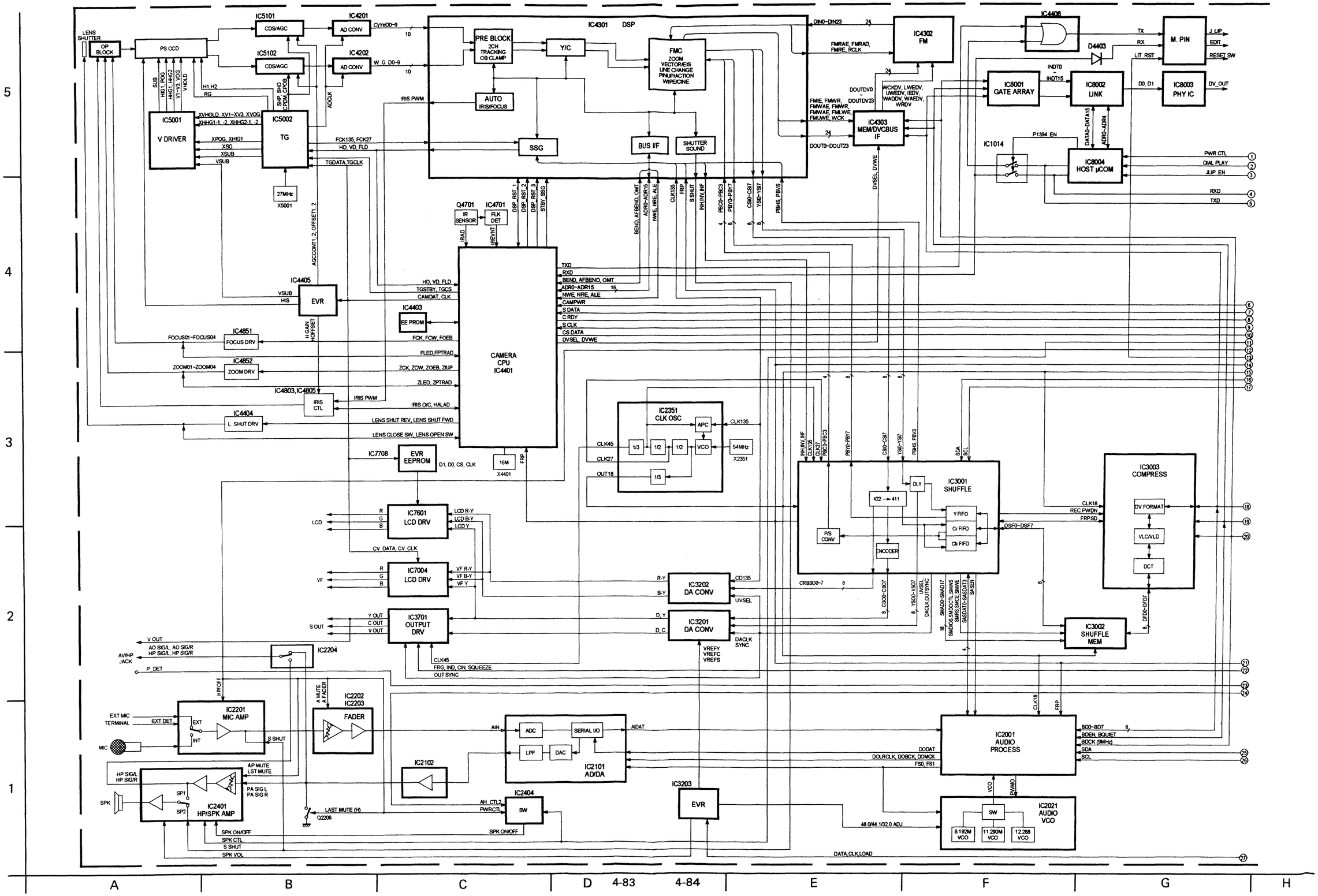

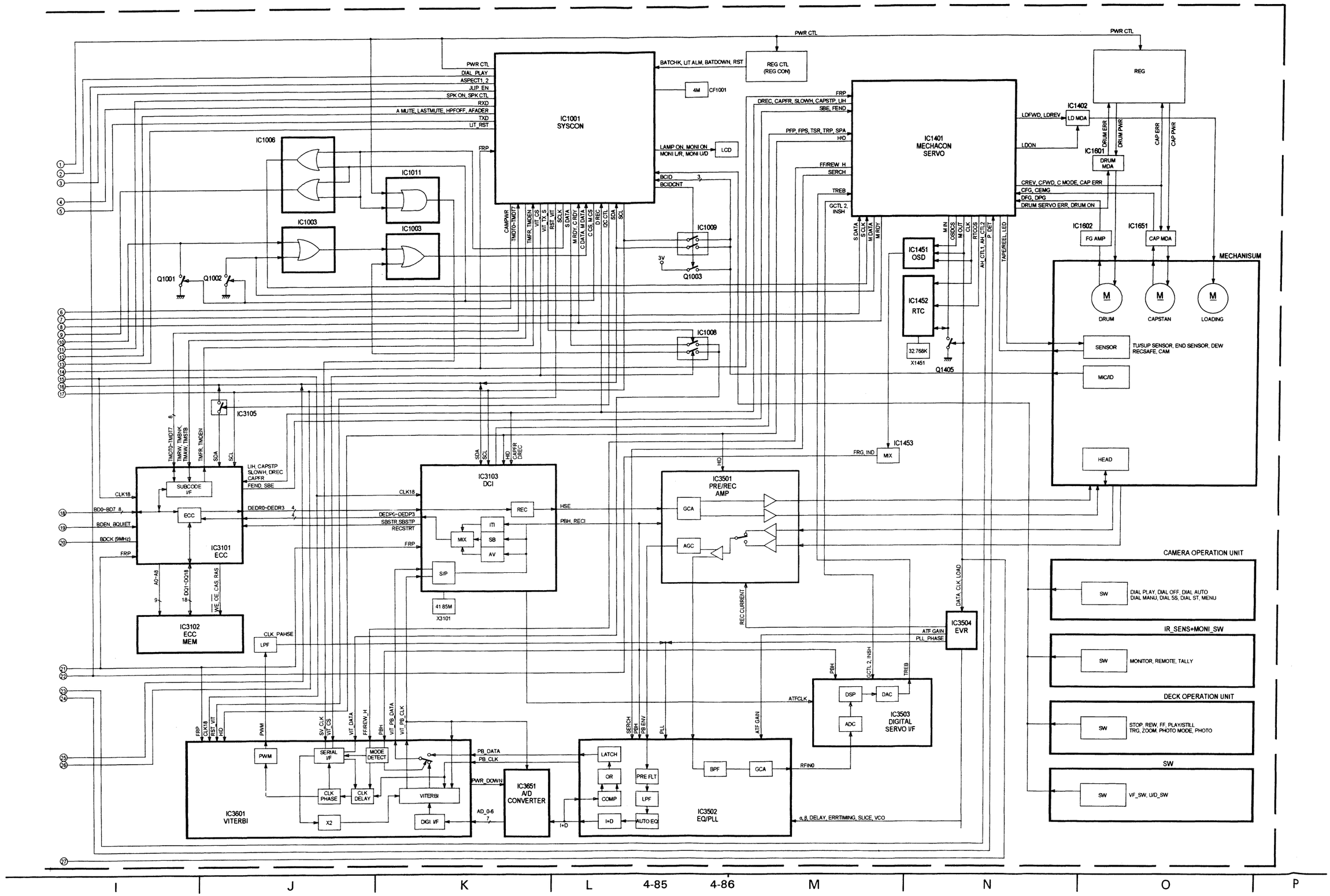

V20955/DRUCK31

4.36 REGULATOR SYSTEM BLOCK DIAGRAM

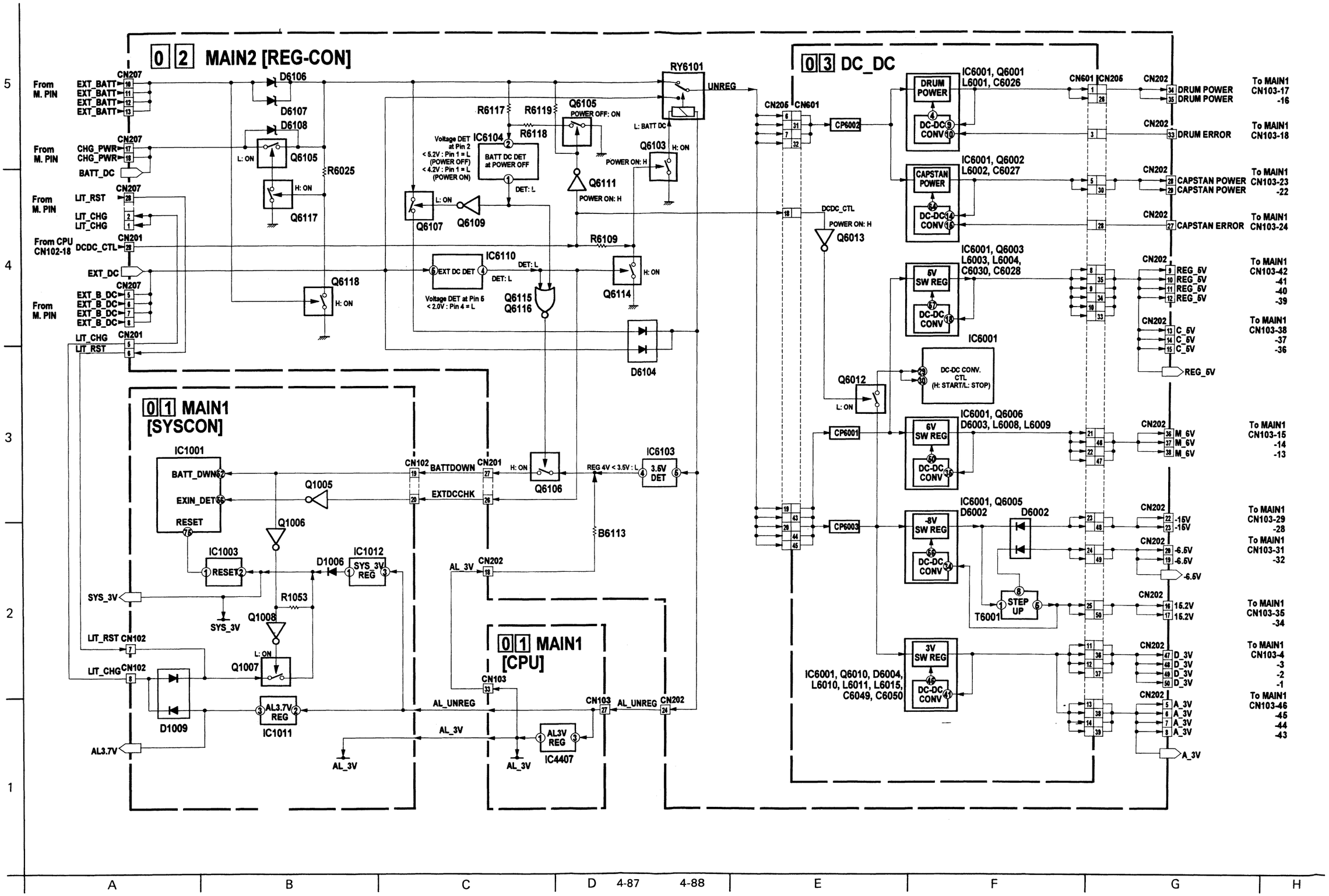

SECTION 5
PARTS LIST

SAFETY PRECAUTION

Parts identified by the ⚠ symbol are critical for safety. Replace only with specified part numbers.

5.1 PACKING ASSEMBLY <M1>

The instruction manual to be provided with this product will differ according to the destination.

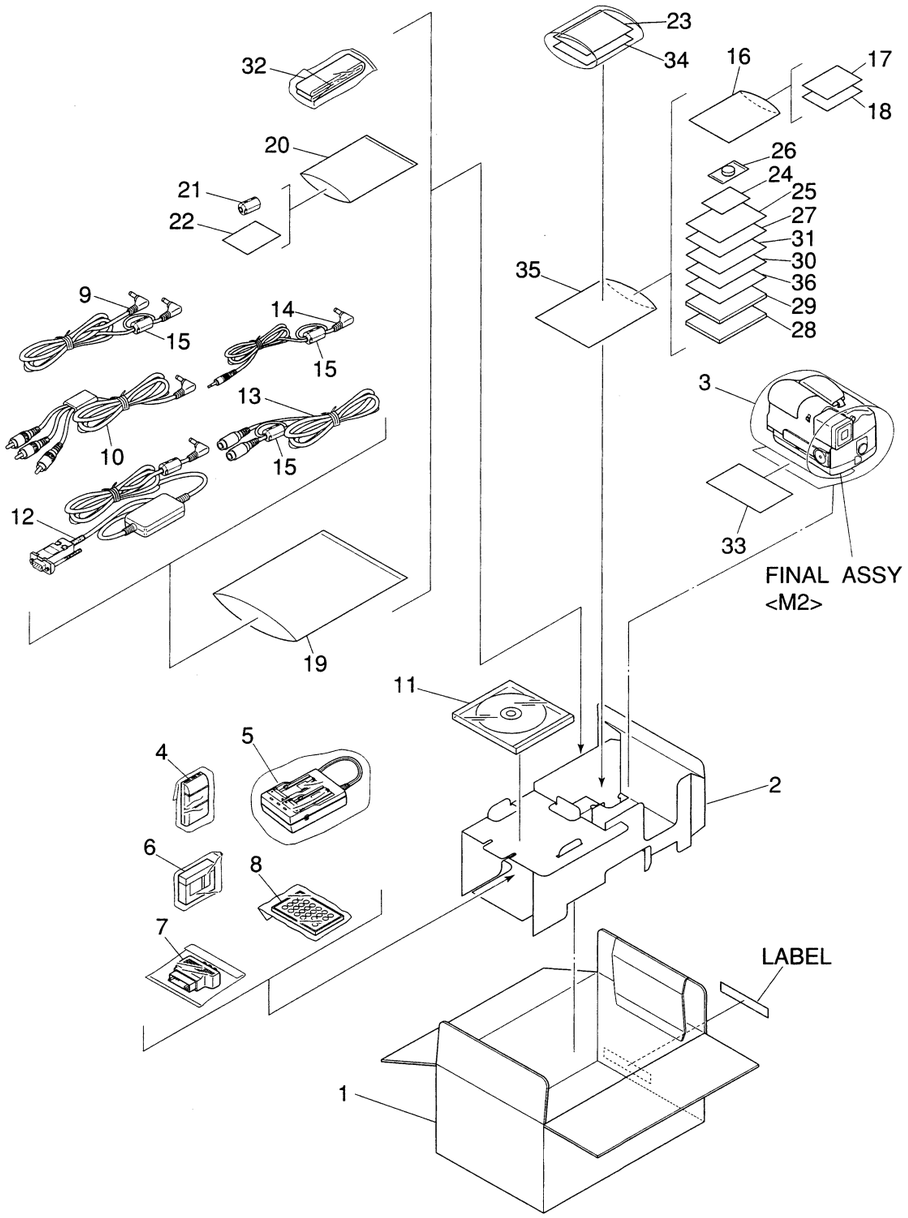

#	⚠	REF No.	PART No.	PART NAME, DESCRIPTION
**********				
				PACKING ASSEMBLY <M1>
		1	LY30744-001A	PACKING CASE,DVL9000EG
			LY30744-002A	PACKING CASE,DVL9000EK
		2	LY20267-001A	CUSHION
		3	LY30023-005A	POLY BAG
	⚠	4	LY30622-002B	BATT.PACK ASSY
	⚠	5	YQ21032M	BATT.CHARG.ASSY,DVL9000EG ※
	⚠		YQ21032N	BATT.CHARG.ASSY,DVL9000EK ※
		6	–	TAPE ASSY
		7	PEMC1000-01-02	CONNECTOR,CABLE ADAPTER
		8	YQ20922M	REMOTE CONTROLLER
		9	PEAC0414	DC PLUG CORD
		10	QAM0120-001	CABLE ASSY,VIDEO/AUDIO
		11	–	CD ROM ASSY
	⚠	12	QAM0099-005	PC CABLE,JLIP
		13	QAM0004-004	S CABLE
		14	PEAC0262-03	PIN CORD,EDITING CABLE
		15	PELN1216-10	NOISE FILTER,X3
		16	QPC01603040	POLY BAG
		17	LP40376-001A	READ ME CARD
		18	LP40378-001A	REGIST CARD(PAL
		19	QPGA017-03005	POLY BAG
		20	LY30023-012A	POLY BAG
		21	PELN1216-12	NOISE FILTER
		22	LYT0129-020A	SHEET(EN,GE,FR)
		23	YQM30061	POLY BAG,DVL9000EG
		24	YQ43558	C.CLOTH ASSY
		25	LYT0162-001A	ACC.LEAFLET
	⚠	26	PECA0903	LI BATTERY
		27	LYT0129-015A	SHEET(EN.CH.RU),DVL9000EG
			LYT0129-016A	SHEET(GE.FR.DU),DVL9000EG
			LYT0129-017A	SHEET(SP.IT.DA),DVL9000EG
			LYT0129-018A	SHEET(FI.SW.NO),DVL9000EG
			LYT0129-019A	SHEET(CZ.PO.HU),DVL9000EG
			LYT0130-002A	SHEET(EN),DVL9000EK
	⚠	28	LYT0129-001A	IB(EN),DVL9000EG
	⚠		LYT0130-001A	IB(EN),DVL9000EK
		29	LYT0117-007A	IB(SOFT.E)(EN)
			LYT0117-008A	IB(SOFT.E)(GE),DVL9000EG
			LYT0117-009A	IB(SOFT.E)(FR),DVL9000EG
			LYT0117-010A	IB(SOFT.E)(DU),DVL9000EG
			LYT0117-011A	IB(SOFT.E)(SP),DVL9000EG
			LYT0117-012A	IB(SOFT.E)(IT),DVL9000EG
			LYT0117-013A	IB(SOFT.E)(DA),DVL9000EG
			LYT0117-014A	IB(SOFT.E)(FI),DVL9000EG
			LYT0117-015A	IB(SOFT.E)(SW),DVL9000EG
			LYT0117-016A	IB(SOFT.E)(NO),DVL9000EG
			LYT0117-018A	IB(SOFT.E)(RU),DVL9000EG
			LYT0117-019A	IB(SOFT.E)(CZ),DVL9000EG
			LYT0117-020A	IB(SOFT.E)(PO),DVL9000EG
			LYT0117-021A	IB(SOFT.E)(HU),DVL9000EG
		30	YU30843-7-1	SOFT WARE PERM.,DVL9000EG
		31	BT-54008-1	GUARANTEE CARD
		32	LY20186-001A	SHOULDER STRAP
		33	LYT0129-021A	SHEET(ATT.),DVL9000EG
	⚠	34	LYT0129-002A	IB(GE),DVL9000EG
	⚠		LYT0129-003A	IB(FR),DVL9000EG
	⚠		LYT0129-004A	IB(DU),DVL9000EG
	⚠		LYT0129-005A	IB(SP),DVL9000EG
	⚠		LYT0129-006A	IB(IT),DVL9000EG
	⚠		LYT0129-007A	IB(DA),DVL9000EG
	⚠		LYT0129-008A	IB(FI),DVL9000EG
	⚠		LYT0129-009A	IB(SW),DVL9000EG
	⚠		LYT0129-010A	IB(NO),DVL9000EG
	⚠		LYT0129-011A	IB(RU),DVL9000EG
	⚠		LYT0129-012A	IB(CZ),DVL9000EG
	⚠		LYT0129-013A	IB(PO),DVL9000EG
	⚠		LYT0129-014A	IB(HU),DVL9000EG
		35	YQM30061	POLY BAG,DVL9000EG
			YQM30061-3	POLY BAG,DVL9000EK
		36	LYT0119-013A	SHEET(MGI SOFT)

※ Refer to AA-V80EG/EK service manual (No. 86376).

• INSTRUCTIONS

EN ..... ENGLISH	FI ..... FINNISH
FR ..... FRENCH	NO ..... NORWEGIAN
GE ..... GERMAN	CH ..... CHINESE
DU ..... DUTCH	RU ..... RUSSIAN
SP ..... SPANISH	CZ ..... CZECH
IT ..... ITALIAN	PO ..... POLISH
SW ..... SWEDISH	HU ..... HUNGARIAN
DA ..... DANISH	

5.2 FINAL ASSEMBLY <M2>

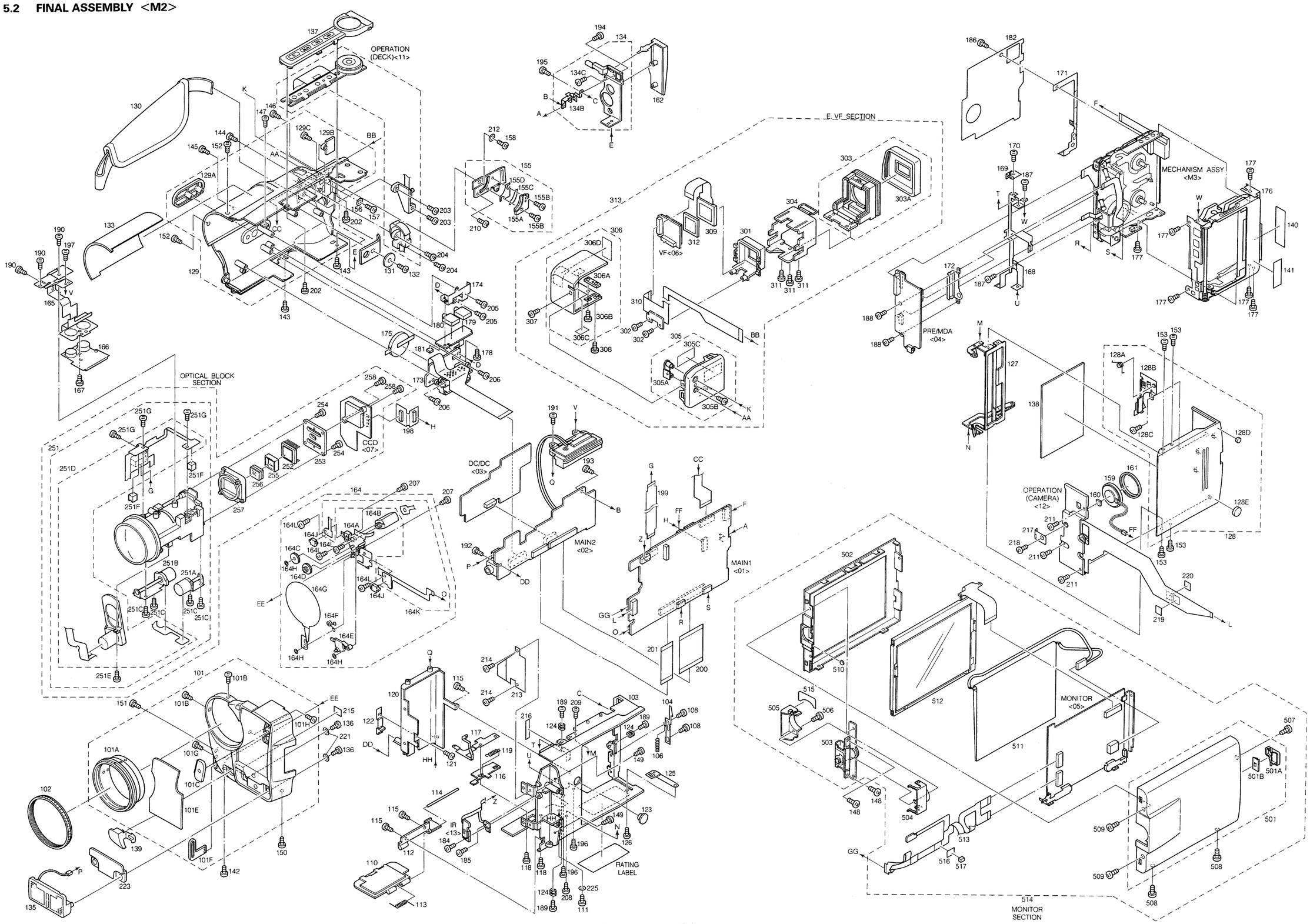

# ⚠	REF No.	PART No.	PART NAME, DESCRIPTION

****

FINAL ASSEMBLY <M2>

	101	LY10097-002A	FRONT COVER ASSY
	101A	LY20188-001E	HOOD
	101B	QYSPSPT1725Z	SCREW,X2
	101C	LY40565-001A	IR WINDOW
	101E	LY30538-002A	PLATE(FRONT)
	101F	LY40567-001C	HOOK
	101G	LY30018-038A	SPECIAL SCREW
	101H	LY30018-007A	SPECIAL SCREW
	102	LY30539-001B	HOOD CAP
	103	LY20190-001D	UPPER CASE
	104	LY40568-001D	LOCK(C.COVER)
	106	LY30002-023A	COMPRESSION SPRING
	108	LY30018-016A	SPECIAL SCREW,X2
	110	LY40665-001E	COVER(BATT.)ASSY
	111	QYSPSGT1730R	SCREW
	112	LY30542-001B	HINGE(B.COVER)
	113	LY40570-001A	TORSION SPRING
	114	LY40571-001A	SHAFT
	115	QYSPSPT1720Z	SCREW,X3
	116	LY40572-001A	KNOB(LOCK)
	117	LY30543-001C	BRACKET(LOCK)
	118	LY30019-006A	SPECIAL SCREW,X2
	119	LY30001-009B	TENSION SPRING
	120	LY30544-001F	CASE(BATTERY)
	121	LY30018-016A	SCREW
	122	LY40573-001C	STOPPER(BATT.)
	123	LY40574-001B	SPACER
	124	LY40575-001A	BUSHING,X3
	125	LY40576-001A	BKT(BOTTOM)
	126	LY30018-040A	SPECIAL SCREW
	127	LY30545-001E	ARM ASSY
⚠	128	LY20191-002D	CASS.COVER ASSY
	128A	LY40581-001B	KNOB(C.COVER)
	128B	LY40582-001C	EJECT ASSY
	128C	LY30018-021A	SPECIAL SCREW
	128D	LY40664-001A	SPACER
	128E	LY40949-001A	SPACER
⚠	129	LY20193-002B	LOWER CASE ASSY
	129A	LY30549-001A	J.COVER
	129B	LY40615-001A	CAP(JIG CONN)
	129C	LY30018-033A	SCREW
	130	LY20235-002A	GRIP BELT
	131	LY40592-001A	CAP(GRIP BELT)
	132	LY30018-003A	SPECIAL SCREW
	133	LY30551-001A	AL PLATE
	134	LY30556-002B	REAR COVER ASSY
	134B	LY30559-001C	BKT(REAR)
	134C	QYSPSPT1715D	SPECIAL SCREW
	135	LY30560-001C	MICROPHONE
	136	QYSPSGT1745Z	SCREW,X2
	137	LY30621-002C	BUTTON(D.OPE)ASSY
	138	LY40728-001A	SHEET
	139	LY30537-001C	JACK COVER
	140	YQ44358-3	LABEL(HOUSING)
	141	YQ44359-2-3	LABEL(PUSH)
	142	QYSPSPT1740D	SCREW
	143	QYSPSPT1740D	SCREW,X2
	144	LY30018-011A	SPECIAL SCREW
	145	QYSLSF2055D	SPECIAL SCREW
	146	QYSPSPT1750D	SCREW
	147	QYSPSGT1740Z	SCREW
	148	LY30018-036A	SPECIAL SCREW,X2
	149	QYSPSGT1750R	SCREW,X2
	150	QYSPSPT1740R	SCREW
	151	QYSPSGT1780D	SCREW
	152	QYSPSPT1725Z	SCREW,X2
	153	LY30018-012A	SCREW,X4
	155	LY40653-001C	BACK PLATE ASSY
	155A	LY40605-001A	SPRING PLATE
	155B	LY30018-005A	SPECIAL SCREW,X2
	155C	LY40926-001A	SLIDE SHEET
	155D	LY40940-001A	SLIDE SHEET(2)
	156	LY30017-008A	SPACER-B
	157	LY30018-014A	SPECIAL SCREW
	158	QYSPSPU2640M	SCREW
	159	QAS0012-002	SPEAKER
	160	LY40759-001A	SPACER(SPK)
	161	LY40301-001A	SPACER(SPK)
	162	LY30558-001C	JACK COVER
	164	LY30629-001D	L.SHUTTER ASSY
	164A	LY30630-001B	MOTOR BASE SA
	164B	LY40623-001A	MOTOR ASSY
	164C	LY40625-001A	LOADING GEAR 1
	164D	LY40626-001A	LOADING GEAR 2
	164E	LY40652-001A	DRIVE ARM ASSY
	164F	LY40628-001A	TORSION SPRING
	164G	LY40629-001C	LENS SHUTTER SA
	164H	YQ44246	SLIT WASHER,X3
	164J	NSW0037-001X	PUSH SWITCH,X2
	164K	QAL0115-001	FPC,MAIN2 CN123
	164L	QYSPSPT1414M	SCREW,X4
	165	LY20198-001C	OP FRAME
	166	LY30562-001C	BASE
	167	QYSPSPT1720D	SCREW
	168	LY30563-001C	BKT(1)
	169	LY40662-001D	BRACKET(PWB)
	170	LY30019-003A	SPECIAL SCREW
	171	LY30564-001D	BKT(2)
	172	LY40656-001B	SHIELD CASE(PR)
	173	LY30565-001A	MULTI CONN.ASSY
	174	LY30584-001A	BKT(MULTI)
⚠	175	QAB0004-001	LI BATTERY
	176	YQ32056C-32	CASSETTE HOUSING ASSY
	177	YQ43893-6	MINI SCREW,X6
	178	QYSPSPT1720Z	SCREW
	179	PEMC1203	MINI JACK
	180	QNS0013-001	3.5 JACK
	181	NSW0008-001X	TACT SWITCH
	182	LY40921-001B	SHEET
	184	QYSPSPT1720R	SCREW
	185	QYSPSPT1720R	SCREW
	186	LY30019-002A	SPECIAL SCREW
	187	YQ43893	MINI SCREW,X2
	188	YQ43893	MINI SCREW,X2
	189	LY30019-005A	SPECIAL SCREW,X3
	190	QYSLSF2055D	SPECIAL SCREW,X3
	191	QYSLSF1750D	SCREW
	192	QYSPSGT1740Z	SCREW
	193	QYSPSPT1720Z	SCREW
	194	LY30019-008A	SPECIAL SCREW
	195	QYSPSPT1720Z	SCREW
	196	QYSPSPT1730R	SCREW,X2
	197	QYSLSF1750D	SCREW
	198	LY30586-001A	FPC ASSY
	199	PEWR0880	FPC
	200	PEWR0876	FPC,MAIN1 CN103-MAIN2 CN202
	201	PEWR0877	FPC,MAIN1 CN102-MAIN2 CN201
	202	QYSPSGT1730Z	SCREW,X2
	203	QYSLSF2055D	SPECIAL SCREW,X2
	204	QYSLSF2055D	SPECIAL SCREW,X2
	205	LY30018-034A	SPECIAL SCREW,X2
	206	LY30018-034A	SPECIAL SCREW,X2
	207	QYSPSGT1745Z	SCREW,X2
	208	LY30018-012A	SPECIAL SCREW
	209	LY30018-012A	SPECIAL SCREW
	210	QYSPSGT1725Z	SCREW
	211	QYSPSGT1735D	SCREW,X3
	212	QYWFM366005	WASHER
	213	LY40760-001A	PROTECT SHEET
	214	LY30018-005A	SPECIAL SCREW,X2
	215	LY30016-092A	SPACER-A
	216	LY30016-086A	SPACER-A
	217	LY40761-001B	BRACKET
	218	LY30018-035A	SPECIAL SCREW
	219	LY30016-087A	SPACER
	220	LY30016-085A	SPACER-A
	221	LY30017-006A	SPACER-B,X2
	223	LY30740-001A	RUBBER(MIC)
	225	LY40664-001A	SPACER

– OPTICAL BLOCK SECTION –

	251	LY30535-001A	OP BLOCK ASSY
	251A	PTY30535-002	FOCUS MOTOR UNIT
	251B	PTY30535-001	ZOOM MOTOR UNIT
	251C	PTY30535-003	SCREW,X4
	251D	PTY30535-106	IRIS MOTOR UNIT,INCL.FPC
	251E	PTY30535-010	SCREW
	251F	PTY30535-007	SENSOR,X2
	251G	PTY30535-016	SCREW,X3
	252	ICX067AU	CCD
	253	YQ42533	CCD BASE
	254	SPSN2080D	SCREW,X2
	255	YQ42774-1-3	SPACER RUBBER
	256	LY40748-001A	OPTICAL LPF
	257	YQ31622	O.LPF HOLDER
	258	LY30018-009A	SPECIAL SCREW,X2

– ELECTRONIC VIEWFINDER SECTION –

	301	LY20211-001B	HOLDER(LCD)
	302	LY30018-010A	SPECIAL SCREW,X2
	303	LY30567-001D	EYE CUP ASSY
	303A	LY30568-001B	EYE CUP
	304	LY30572-001C	SLIDE CASE ASSY
⚠	305	LY30574-001D	CASE(BOTTOM)ASSY
	305A	LY40600-001A	ANGLE ASSY
	305B	LY30018-016A	SPECIAL SCREW
	305C	LY40946-001A	PROTECT SHEET(2)
⚠	306	LY30576-002A	CASE(UPPER)ASSY,DVL9000EG
⚠		LY30576-003A	CASE(UPPER)ASSY,DVL9000EK
	306A	LY40604-001C	PLATE
	306B	QYSPSPT1718D	SCREW
	306C	LY40945-001A	PROTECT SHEET(1)
	306D	LY40946-001A	PROTECT SHEET(2)
	307	QYSPSPT1730D	SCREW
	308	QYSPSPT1718D	SCREW
	309	PEDP0191	LCD PANEL
	310	LY30588-001B	FPC ASSY
	311	QYSSSPT1720D	SCREW,X3
	312	LY40127-001A	SPACER(LCD.)
⚠	313	YS20939B	EVF ASSY,DVL9000EG
⚠		YS20939C	EVF ASSY,DVL9000EK

– MONITOR SECTION –

⚠	501	LY20194-002B	MONITOR COVER ASSY
	501A	LY30554-002A	BUTTON(LOCK)
	501B	LY40593-001B	SPRING
⚠	502	LY20196-001C	MONITOR CASE
	503	LY30555-001C	HINGE ASSY
	504	LY30660-001C	HINGE COVER(1)
	505	LY30661-001C	HINGE COVER(2)
	506	QYSPSPT1740R	SCREW
	507	QYSPSPT1735R	SCREW
	508	QYSPSPT1735R	SCREW,X2
	509	LY30018-028A	SPECIAL SCREW,X2
	510	LY40663-001A	MAGNET
	511	QLL0031-001	BACK LIGHT
	512	QLD0016-001	LCD MODULE
	513	LY30585-001B	FPC ASSY
⚠	514	YS20955B-1	MONITOR ASSY
	515	LY40764-001A	SHEET
	516	LY30016-0A1A	SPACER-A
	517	LY30016-084A	SPACER-A

5.3 MECHANISM ASSEMBLY <M3>

BEWARE OF BOGUS PARTS

Parts that do not meet specifications may cause trouble in regard to safety and performance. We recommend that genuine JVC parts be used.

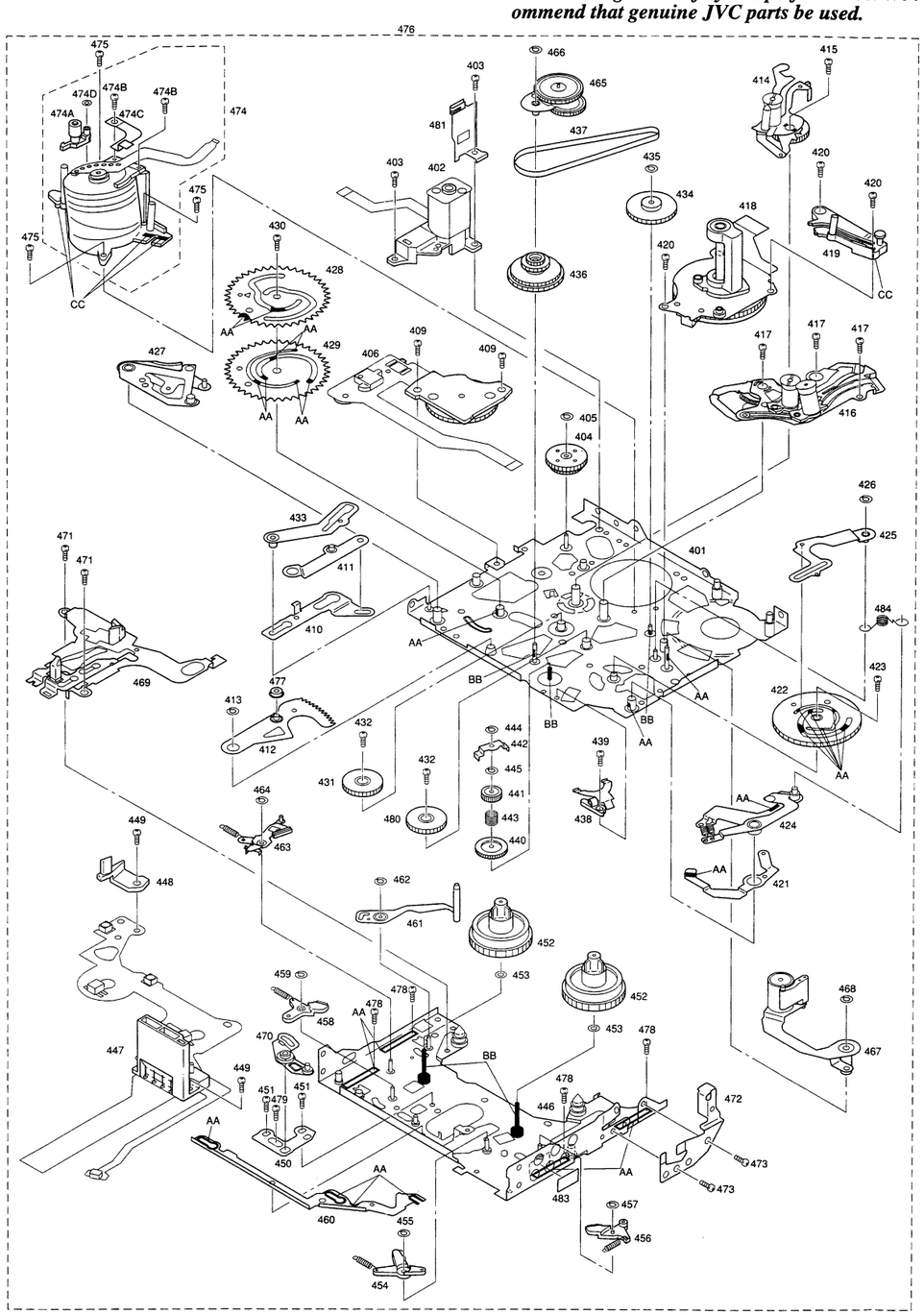

Classification	Part No.	Symbol in drawing
Grease	KYODO-SH-P	AA
Oil	YTU94027	BB
Grease (DRY SURF)	XF-200R	CC

NOTE: The section marked in AA and BB, CC indicate lubrication and greasing areas.

# ⚠ REF No.	PART No.	PART NAME, DESCRIPTION

****

MECHANISM ASSEMBLY <M3>

# ⚠ REF No.	PART No.	PART NAME, DESCRIPTION
401	YQ10539A-13	MAIN DECK ASSY
402	YQ32058B-8	MOTOR BRACKET ASSY
403	YQ43893	MINI SCREW,X2
404	YQ43892	WORM WHEEL
405	YQ44246	SLIT WASHER
406	YS30779B	ROTARY ENCODER ASSY
409	YQ43893	MINI SCREW,X2
410	YQ32176	EJECT PLATE
411	YQ44416A-4	EJECT LEVER ASSY
412	YQ43896A-5	ARM GEAR ASSY
413	PQM30017-43	SLIT WASHER
414	YQ31873A-26	GUIDE RAIL(SUPPLY)ASSY
415	YQ43893	MINI SCREW
416	YQ20833A-17	GUIDE RAIL(TAKE-UP)ASSY
417	YQ43893	MINI SCREW,X3
418	QAR0040-002	CAPSTAN MOTOR
419	YQ31881A-5	MIDLE CATCHER ASSY
420	YQ43893	MINI SCREW,X3
421	YQ43916A-6	CLUTCH LOCK LEVER ASSY
422	YQ44594A-1	SUB CAM GEAR ASSY
423	YQ43893	MINI SCREW
424	YQ32039A-11	CHARGE ARM ASSY
425	YQ44592A	BRAKE CTL ARM ASSY
426	YQ44246	SLIT WASHER
427	YQ44364A-4	SLIDE LEVER ASSY
428	YQ44551A-4	MAIN CAM(1) ASSY
429	YQ31888-1-9	MAIN CAM(2)
430	YQ43893-7	MINI SCREW
431	YQ43927-1-2	CONNECT GEAR
432	YQ43893	MINI SCREW,X2
433	YQ43928A-6	TENSION ARM CTL PLATE ASSY
434	YQ43931A	R.DRIVE PULLEY ASSY
435	YQ44246	SLIT WASHER
436	YQ43934A-9	CENTER GEAR ASSY
437	YQ43936-1-1	TIMING BELT
438	YQ43946A-11	BASE PLATE ASSY
439	YQ43893	MINI SCREW
440	YQ31892-1-1	C.LOCK GEAR(1)
441	YQ43950	C.LOCK GEAR(2)
442	YQ43951-1-2	PUSH PLATE
443	YQ32050-1	COMPRESSION SPRING
444	YQ44246	SLIT WASHER
445	YQ43933	WASHER
446	YQ10541A-16	SLIDE DECK ASSY
447	YS30780A	FPC ASSY
448	YQ31895-1-5	PRISM(S)
449	YQ43893	MINI SCREW,X2
450	YQ32180	SLIDE GUIDE PLATE
451	YQ43893-2	MINI SCREW,X2
452	YQ43965A-6	REEL DISK ASSY,X2
453	YQ43933-2	WASHER,X2
454	YQ43970A-11	SUB BRAKE ASSY
455	YQ44246	SLIT WASHER
456	YQ43971A-5	MAIN BRAKE(TAKE-UP)ASSY
457	YQ44246	SLIT WASHER
458	YQ43972A-4	MAIN BRAKE(SUPPLY)ASSY
459	YQ44246	SLIT WASHER
460	YQ43974A-8	CTL.PLATE ASSY
461	YQ43975A-14	TENSION ARM ASSY
462	YQ44246	SLIT WASHER
463	YQ44216A-12	PAD ARM ASSY
464	YQ44246	SLIT WASHER
465	YQ43983A-6	SWING ARM ASSY
466	YQ44246-2	SLIT WASHER
467	YQ32043B-16	PINCH ROLLER ARM ASSY
468	YQ44246	SLIT WASHER
469	YQ44374A-8	REEL COVER ASSY
470	YQ44379A-4	RELEASE LEVER2 ASST
471	YQ43893	MINI SCREW,X2
472	YQ44080-1-2	LID GUIDE
473	YQ43893	MINI SCREW,X2
474	YDV2087D	DRUM ASSY
474A	YQ44081A-10	CLEANER ASSY
474B	YQ43893-3	MINI SCREW,X2
474C	YDM4143	BRACKET
474D	YQ44246	SLIT WASHER
475	YQ43893	MINI SCREW,X3
476	YMA0018T	MECHA(A)ASSY ※ NOTE1)
477	YQ44454	COLLER
478	YQ43893	MINI SCREW,X4
479	YQ43893-2	MINI SCREW
480	YQ44560-1-2	CONNECT GEAR 2
481	YQ44559-1-6	ASSIST SPRING
483	YQ44351	SHEET(R.ENC.)
484	YQ44637-1-5	LIMIT SPRING

NOTE 1) : For this part, a cassette housing assy is included in it.

5.4 ELECTRICAL PARTS LIST

# ⚠ REF No.	PART No.	PART NAME, DESCRIPTION
**********	**********	**********

MAIN1 BOARD ASSEMBLY <01>

PW	YB10214B-01	MAIN1 BOARD ASSY
IC1001	MB90678PFV-P05	IC
IC1002	TC7W08FU	IC(DIGITAL)
IC1003	TC7W32FU	IC(DIGITAL)
IC1004	TC7W04FU	IC(DIGITAL)
IC1005	TC7W32FU	IC(DIGITAL)
IC1006	TC7W32FU	IC(DIGITAL)
IC1008	TC4W66FU	IC(DIGITAL)
IC1009	TC4W66FU	IC(DIGITAL)
IC1010	TC4W66FU	IC(DIGITAL)
IC1011	S-81235SG-QI-X	IC
IC1012	S-81333HG-KF-X	IC
IC1013	S-80723SN-DL-X	IC
IC1014	TC4W66FU	IC(DIGITAL)
IC1015	TC7W32FU	IC(DIGITAL)
IC1401	M37774M5L430GP	IC
IC1402	BA6417F	IC
IC1403	TC7W14FU	IC(DIGITAL)
IC1451	UPD6461GS-926-X	IC
IC1452	S-3510ANFJA-W	IC
IC1453	TC7W32FU	IC(DIGITAL)
IC2001	M65401FP	IC
IC2002	TC7W00FU	IC(DIGITAL)
IC2003	TC7W00FU	IC(DIGITAL)
IC2021	M52660FP	IC
IC2351	UPC2384GA	IC
IC2401	BA7785FS	IC
IC2402	TC7S66FU	IC(DIGITAL)
IC2403	TA75S393F	IC
IC2404	TC7W08FU	IC(DIGITAL)
IC2405	TC7S08FU	IC(DIGITAL)
IC3001	YQ44796A	CSP IC ASSY
IC3002	MN47V07AF	IC
IC3003	YQ44797A	CSP IC ASSY
IC3004	RH5RE23AA	IC
IC3101	L7A1433	IC
	or L7B1369	IC
IC3102	MN41V4260TT-A07	IC(DIGITAL)
IC3103	L7A1501	IC
IC3105	TC7S66FU	IC(DIGITAL)
IC3201	MN657021F	IC
IC3202	MN657021F	IC
IC3203	M62366GP	IC
IC3204	S-81230SG-QB-X	IC
IC3601	TC6326AF	IC
IC3651	AD9057BRS-60-X	IC
IC4201	AD9200JST	IC
IC4202	AD9200JST	IC
IC4203	TK11331BMC	IC
IC4301	YQ44798A	CSP IC ASSY
IC4302	MSM5424331TS-AK	IC
IC4303	JCY0105	IC
IC4304	RH5RE23AA	IC
IC4401	MN1021213JD	IC
IC4402	PST9127N	IC
IC4403	X25057M8-2.7-X	IC
IC4404	BA6417F	IC
IC4405	MB88346BPFV	IC
IC4406	TC7S00FU	IC
IC4407	S-81330HG-KB-X	IC
IC4408	TC7W08FU	IC(DIGITAL)
IC4701	TA75W01FU	IC
IC4802	TA75W01FU	IC
IC4803	TA75W01FU	IC
IC4804	NJM3414AV	IC
IC4805	MM6564XFBE	IC
IC4806	TC7W00FU	IC(DIGITAL)
IC4851	SPC17A85ZVM	IC
IC4852	SPC17A85ZVM	IC
IC7001	TK11900M	IC
IC7002	UPC358GR	IC
IC7003	TC7SET02FU	IC(DIGITAL)
IC7004	CXA2503AR	IC
IC7005	TC7SET08FU	IC(DIGITAL)
IC8001	JCY0104	IC
IC8002	CXD1940AR	IC
IC8003	TSB11LV01PT	IC
IC8004	HD32243K01TE	IC(MICRO C ROM)
	or HD72246TEK01	IC(MICRO C ROM)
IC8005	TC7S04FU	IC
IC8006	PST9125N	IC
Q1001	DTC144EE	TRANSISTOR
Q1002	DTC144EE	TRANSISTOR
Q1003	DTA114TE	TRANSISTOR
Q1005	2SK1133	MOS FET
Q1006	2SK1133	MOS FET
Q1007	2SJ203	MOS FET
Q1008	2SK2158	MOS FET
Q1010	2SJ501	MOS FET
Q1403	UMC3N	TRANSISTOR
Q1404	UMC3N	TRANSISTOR
Q1405	DTC143EE	TRANSISTOR
Q1406	DTC143EE	TRANSISTOR
Q1407	UMC3N	TRANSISTOR
Q2401	2SC4617/QR/-X	TRANSISTOR
Q2402	2SC4617/QR/-X	TRANSISTOR
Q2403	2SD1511/R/-X	TRANSISTOR
Q2404	2SD1511/R/-X	TRANSISTOR
Q2405	2SC4617/QR/-X	TRANSISTOR
Q2406	DTA144EE	TRANSISTOR
Q2411	2SC4617/QR/-X	TRANSISTOR
Q2414	DTC144EE	TRANSISTOR
Q3201	2SC4617/QRS/-X	TRANSISTOR
Q3202	2SC4617/QRS/-X	TRANSISTOR
Q3203	2SA1774/QRS/-X	TRANSISTOR
Q3204	2SC4617/QRS/-X	TRANSISTOR
Q3205	DTA144EE	TRANSISTOR
Q3206	2SC4617/QRS/-X	TRANSISTOR
Q3207	2SA1774/QRS/-X	TRANSISTOR
Q3208	2SC4617/QRS/-X	TRANSISTOR
Q3209	2SA1774/QRS/-X	TRANSISTOR
Q4401	DTC144EE	TRANSISTOR
Q4402	DTC143ZE	TRANSISTOR
Q4403	DTC143ZE	TRANSISTOR
Q4404	DTC144EE	TRANSISTOR
Q4405	DTC144EE	TRANSISTOR
Q4406	DTC144EE	TRANSISTOR
Q4407	2SC4617/RS/-X	TRANSISTOR

# ⚠ REF No.	PART No.	PART NAME, DESCRIPTION	
Q4701	PH106	PHOTO TRANSISTOR	
Q4801	DTC114EE	TRANSISTOR	
Q4802	2SA1576A/QRS/-X	TRANSISTOR	
Q4803	2SC4655/BC/-X	TRANSISTOR	
Q4851	XP4601	TRANSISTOR	
Q4852	XP1216	TRANSISTOR	
Q7001	2SC4655/BC/-X	TRANSISTOR	
D1001	DAP222	DIODE	
D1002	DAP222	DIODE	
D1003	DAP222	DIODE	
D1004	DAP222	DIODE	
D1005	DAP222	DIODE	
D1006	SB007-03Q-X	SB DIODE	
⚠ D1009	MA716	DIODE	
D2402	DAN222	DIODE	
D4401	DAN222	DIODE	
D4402	DAP222	DIODE	
D4403	SB007W03Q	SB DIODE	
D4701	1SS355	DIODE	
D4851	IMN10	DIODE	
D7001	MA365	VARI CAP DIODE	
DA1401	DAP222	DIODE	
DA1402	DAP222	DIODE	
R1001	NRSA6AJ-0R0W	MG RESISTOR	0Ω,1/16W
R1003	NRSA6AJ-473W	MG RESISTOR	47kΩ,1/16W
R1004	NRSA6AJ-101W	MG RESISTOR	100Ω,1/16W
R1005	NRSA6AJ-101W	MG RESISTOR	100Ω,1/16W
R1006	NRSA6AJ-101W	MG RESISTOR	100Ω,1/16W
R1007	NRSA6AJ-101W	MG RESISTOR	100Ω,1/16W
R1008	NRSA6AJ-102W	MG RESISTOR	1kΩ,1/16W
R1009	NRSA6AJ-102W	MG RESISTOR	1kΩ,1/16W
R1010	NRSA6AJ-222W	MG RESISTOR	2.2kΩ,1/16W
R1011	NRSA6AJ-102W	MG RESISTOR	1kΩ,1/16W
R1012	NRSA6AJ-102W	MG RESISTOR	1kΩ,1/16W
R1013	NRSA6AJ-102W	MG RESISTOR	1kΩ,1/16W
R1014	NRSA6AJ-102W	MG RESISTOR	1kΩ,1/16W
R1015	NRSA6AJ-102W	MG RESISTOR	1kΩ,1/16W
R1016	NRSA6AJ-102W	MG RESISTOR	1kΩ,1/16W
R1017	NRSA6AJ-102W	MG RESISTOR	1kΩ,1/16W
R1018	NRSA6AJ-102W	MG RESISTOR	1kΩ,1/16W
R1019	NRSA6AJ-104W	MG RESISTOR	100kΩ,1/16W
R1021	NRVA6AD-823W	CMF RESISTOR	82kΩ,1/16W
R1022	NRVA6AD-332W	MG RESISTOR	3.3kΩ,1/16W
R1023	NRVA6AD-563W	CMF RESISTOR	56kΩ,1/16W
R1025	NRSA6AJ-104W	MG RESISTOR	100kΩ,1/16W
R1026	NRSA6AJ-473W	MG RESISTOR	47kΩ,1/16W
R1027	NRSA6AJ-0R0W	MG RESISTOR	0Ω,1/16W
R1028	NRSA6AJ-224W	MG RESISTOR	220kΩ,1/16W
R1029	NRSA6AJ-334W	MG RESISTOR	330kΩ,1/16W
R1030	NRSA6AJ-104W	MG RESISTOR	100kΩ,1/16W
R1031	NRSA6AJ-104W	MG RESISTOR	100kΩ,1/16W
R1032	NRSA6AJ-103W	MG RESISTOR	10kΩ,1/16W
R1034	NRSA6AJ-102W	MG RESISTOR	1kΩ,1/16W
R1035	NRSA6AJ-473W	MG RESISTOR	47kΩ,1/16W
R1036	NRSA6AJ-473W	MG RESISTOR	47kΩ,1/16W
R1037	NRSA6AJ-473W	MG RESISTOR	47kΩ,1/16W
R1038	NRSA6AJ-223W	MG RESISTOR	22kΩ,1/16W
R1039	NRSA6AJ-102W	MG RESISTOR	1kΩ,1/16W
R1040	NRSA6AJ-102W	MG RESISTOR	1kΩ,1/16W
R1041	NRSA6AJ-102W	MG RESISTOR	1kΩ,1/16W
R1045	NRSA6AJ-102W	MG RESISTOR	1kΩ,1/16W

# ⚠ REF No.	PART No.	PART NAME, DESCRIPTION	
R1046	NRSA6AJ-102W	MG RESISTOR	1kΩ,1/16W
R1047	NRSA6AJ-102W	MG RESISTOR	1kΩ,1/16W
R1048	NRSA6AJ-471W	MG RESISTOR	470Ω,1/16W
R1049	NRSA6AJ-105W	MG RESISTOR	1MΩ,1/16W
⚠ R1050	NRSA63J-330X	MG RESISTOR	33Ω,1/16W
R1051	NRSA6AJ-102W	MG RESISTOR	1kΩ,1/16W
R1052	NRSA6AJ-104W	MG RESISTOR	100kΩ,1/16W
R1053	NRSA6AJ-104W	MG RESISTOR	100kΩ,1/16W
R1054	NRSA6AJ-564W	MG RESISTOR	560kΩ,1/16W
R1055	NRSA63J-391X	MG RESISTOR	390Ω,1/16W
R1056	NRSA6AJ-473W	MG RESISTOR	47kΩ,1/16W
R1057	NRSA6AJ-473W	MG RESISTOR	47kΩ,1/16W
R1058	NRSA6AJ-223W	MG RESISTOR	22kΩ,1/16W
R1059	NRSA6AJ-104W	MG RESISTOR	100kΩ,1/16W
R1060	NRSA6AJ-104W	MG RESISTOR	100kΩ,1/16W
R1061	NRSA6AJ-104W	MG RESISTOR	100kΩ,1/16W
R1062	NRSA6AJ-104W	MG RESISTOR	100kΩ,1/16W
R1063	NRSA6AJ-104W	MG RESISTOR	100kΩ,1/16W
R1064	NRSA6AJ-104W	MG RESISTOR	100kΩ,1/16W
R1065	NRSA6AJ-104W	MG RESISTOR	100kΩ,1/16W
⚠ R1066	NRSA63J-102X	MG RESISTOR	1kΩ,1/16W
R1069	NRSA6AJ-104W	MG RESISTOR	100kΩ,1/16W
R1070	NRSA6AJ-222W	MG RESISTOR	2.2kΩ,1/16W
R1071	NRSA6AJ-751W	MG RESISTOR	750Ω,1/16W
R1072	NRSA6AJ-102W	MG RESISTOR	1kΩ,1/16W
R1401	NRSA6AJ-332W	MG RESISTOR	3.3kΩ,1/16W
R1402	NRSA6AJ-332W	MG RESISTOR	3.3kΩ,1/16W
R1403	NRSA6AJ-332W	MG RESISTOR	3.3kΩ,1/16W
R1404	NRSA6AJ-332W	MG RESISTOR	3.3kΩ,1/16W
R1407	NRSA6AJ-124W	MG RESISTOR	120kΩ,1/16W
R1410	NRSA6AJ-820W	MG RESISTOR	82Ω,1/16W
R1411	NRSA6AJ-101W	MG RESISTOR	100Ω,1/16W
R1412	NRSA6AJ-105W	MG RESISTOR	1MΩ,1/16W
R1413	NRSA6AJ-221W	MG RESISTOR	220Ω,1/16W
R1414	NRSA6AJ-472W	MG RESISTOR	4.7kΩ,1/16W
R1417	NRSA6AJ-823W	MG RESISTOR	82kΩ,1/16W
R1418	NRSA6AJ-103W	MG RESISTOR	10kΩ,1/16W
R1419	NRSA6AJ-102W	MG RESISTOR	1kΩ,1/16W
R1420	NRSA6AJ-102W	MG RESISTOR	1kΩ,1/16W
R1421	NRSA6AJ-104W	MG RESISTOR	100kΩ,1/16W
R1422	NRSA6AJ-104W	MG RESISTOR	100kΩ,1/16W
R1423	NRSA6AJ-202W	MG RESISTOR	2kΩ,1/16W
R1424	NRSA6AJ-202W	MG RESISTOR	2kΩ,1/16W
R1425	NRSA6AJ-334W	MG RESISTOR	330kΩ,1/16W
R1426	NRSA6AJ-274W	MG RESISTOR	270kΩ,1/16W
R1427	NRSA6AJ-563W	MG RESISTOR	56kΩ,1/16W
R1428	NRSA6AJ-563W	MG RESISTOR	56kΩ,1/16W
R1430	NRSA6AJ-102W	MG RESISTOR	1kΩ,1/16W
R1431	NRSA6AJ-102W	MG RESISTOR	1kΩ,1/16W
R1432	NRSA6AJ-472W	MG RESISTOR	4.7kΩ,1/16W
R1433	NRSA6AJ-103W	MG RESISTOR	10kΩ,1/16W
R1435	NRVA6AD-753W	CMF RESISTOR	75kΩ,1/16W
R1451	NRSA6AJ-102W	MG RESISTOR	1kΩ,1/16W
R1452	NRSA6AJ-105W	MG RESISTOR	1MΩ,1/16W
R1453	NRSA6AJ-103W	MG RESISTOR	10kΩ,1/16W
R2001	NRSA6AJ-105W	MG RESISTOR	1MΩ,1/16W
R2002	NRSA6AJ-105W	MG RESISTOR	1MΩ,1/16W
R2005	NRSA6AJ-103W	MG RESISTOR	10kΩ,1/16W
R2021	NRSA6AJ-391W	MG RESISTOR	390Ω,1/16W
R2022	NRSA6AJ-391W	MG RESISTOR	390Ω,1/16W
R2023	NRSA6AJ-391W	MG RESISTOR	390Ω,1/16W

# ⚠ REF No.	PART No.	PART NAME, DESCRIPTION	
R2024	NRSA6AJ-391W	MG RESISTOR	390Ω,1/16W
R2025	NRSA6AJ-0R0W	MG RESISTOR	0Ω,1/16W
R2027	NRSA6AJ-562W	MG RESISTOR	5.6kΩ,1/16W
R2028	NRSA6AJ-823W	MG RESISTOR	82kΩ,1/16W
R2029	NRSA6AJ-391W	MG RESISTOR	390Ω,1/16W
R2030	NRSA6AJ-391W	MG RESISTOR	390Ω,1/16W
R2031	NRSA6AJ-121W	MG RESISTOR	120Ω,1/16W
R2033	NRSA6AJ-103W	MG RESISTOR	10kΩ,1/16W
R2034	NRSA6AJ-121W	MG RESISTOR	120Ω,1/16W
R2036	NRSA6AJ-103W	MG RESISTOR	10kΩ,1/16W
R2037	NRSA6AJ-121W	MG RESISTOR	120Ω,1/16W
R2039	NRSA6AJ-103W	MG RESISTOR	10kΩ,1/16W
R2040	NRSA6AJ-0R0W	MG RESISTOR	0Ω,1/16W
R2041	NRSA6AJ-154W	MG RESISTOR	150kΩ,1/16W
R2042	NRSA6AJ-154W	MG RESISTOR	150kΩ,1/16W
R2043	NRSA6AJ-0R0W	MG RESISTOR	0Ω,1/16W
R2051	NRSA6AJ-0R0W	MG RESISTOR	0Ω,1/16W
R2052	NRSA6AJ-0R0W	MG RESISTOR	0Ω,1/16W
R2053	NRSA6AJ-0R0W	MG RESISTOR	0Ω,1/16W
R2054	NRSA6AJ-0R0W	MG RESISTOR	0Ω,1/16W
R2055	NRSA6AJ-0R0W	MG RESISTOR	0Ω,1/16W
R2056	NRSA6AJ-0R0W	MG RESISTOR	0Ω,1/16W
R2057	NRSA6AJ-0R0W	MG RESISTOR	0Ω,1/16W
R2058	NRSA6AJ-0R0W	MG RESISTOR	0Ω,1/16W
R2059	NRSA6AJ-0R0W	MG RESISTOR	0Ω,1/16W
R2060	NRSA6AJ-0R0W	MG RESISTOR	0Ω,1/16W
R2061	NRSA6AJ-0R0W	MG RESISTOR	0Ω,1/16W
R2062	NRSA6AJ-0R0W	MG RESISTOR	0Ω,1/16W
R2063	NRSA6AJ-0R0W	MG RESISTOR	0Ω,1/16W
R2064	NRSA6AJ-0R0W	MG RESISTOR	0Ω,1/16W
R2065	NRSA6AJ-0R0W	MG RESISTOR	0Ω,1/16W
R2351	NRSA6AJ-103W	MG RESISTOR	10kΩ,1/16W
R2352	NRSA6AJ-103W	MG RESISTOR	10kΩ,1/16W
R2353	NRSA6AJ-103W	MG RESISTOR	10kΩ,1/16W
R2354	NRSA6AJ-393W	MG RESISTOR	39kΩ,1/16W
R2355	NRSA6AJ-912W	MG RESISTOR	9.1kΩ,1/16W
R2356	NRSA6AJ-103W	MG RESISTOR	10kΩ,1/16W
R2357	NRSA6AJ-103W	MG RESISTOR	10kΩ,1/16W
R2358	NRSA6AJ-181W	MG RESISTOR	180Ω,1/16W
R2359	NRSA6AJ-101W	MG RESISTOR	100Ω,1/16W
R2360	NRSA6AJ-101W	MG RESISTOR	100Ω,1/16W
R2361	NRSA6AJ-101W	MG RESISTOR	100Ω,1/16W
R2362	NRSA6AJ-0R0W	MG RESISTOR	0Ω,1/16W
R2364	NRVA6AD-473W	CMF RESISTOR	47kΩ,1/16W
R2365	NRSA6AJ-0R0W	MG RESISTOR	0Ω,1/16W
R2402	NRSA6AJ-103W	MG RESISTOR	10kΩ,1/16W
R2403	NRSA6AJ-222W	MG RESISTOR	2.2kΩ,1/16W
R2404	NRVA6AD-152W	CMF RESISTOR	1.5kΩ,1/16W
R2405	NRSA6AJ-472W	MG RESISTOR	4.7kΩ,1/16W
R2406	NRVA6AD-472W	CMF RESISTOR	4.7kΩ,1/16W
R2407	NRSA6AJ-332W	MG RESISTOR	3.3kΩ,1/16W
R2408	NRSA6AJ-104W	MG RESISTOR	100kΩ,1/16W
R2409	NRSA6AJ-183W	MG RESISTOR	18kΩ,1/16W
R2410	NRSA6AJ-564W	MG RESISTOR	560kΩ,1/16W
R2411	NRSA6AJ-273W	MG RESISTOR	27kΩ,1/16W
R2412	NRSA6AJ-153W	MG RESISTOR	15kΩ,1/16W
R2413	NRSA6AJ-0R0W	MG RESISTOR	0Ω,1/16W
R2417	NRSA6AJ-222W	MG RESISTOR	2.2kΩ,1/16W
R2418	NRSA6AJ-221W	MG RESISTOR	220Ω,1/16W
R2419	NRVA6AD-221W	CMF RESISTOR	220Ω,1/16W
R2420	NRSA6AJ-103W	MG RESISTOR	10kΩ,1/16W

# ⚠ REF No.	PART No.	PART NAME, DESCRIPTION	
R2421	NRSA6AJ-103W	MG RESISTOR	10kΩ,1/16W
R2422	NRSA6AJ-332W	MG RESISTOR	3.3kΩ,1/16W
R2423	NRSA6AJ-332W	MG RESISTOR	3.3kΩ,1/16W
R2424	NRSA6AJ-563W	MG RESISTOR	56kΩ,1/16W
R2425	NRSA6AJ-563W	MG RESISTOR	56kΩ,1/16W
R2427	NRSA6AJ-273W	MG RESISTOR	27kΩ,1/16W
R2428	NRSA6AJ-473W	MG RESISTOR	47kΩ,1/16W
R2429	NRSA6AJ-473W	MG RESISTOR	47kΩ,1/16W
R2433	NRVA6AD-393W	CMF RESISTOR	39kΩ,1/16W
R2434	NRVA6AD-513W	CMF RESISTOR	51kΩ,1/16W
R2454	NRSA6AJ-0R0W	MG RESISTOR	0Ω,1/16W
R2455	NRSA6AJ-0R0W	MG RESISTOR	0Ω,1/16W
R2459	NRSA6AJ-155W	MG RESISTOR	1.5MΩ,1/16W
R2460	NRSA6AJ-474W	MG RESISTOR	470kΩ,1/16W
R2467	NRSA6AJ-0R0W	MG RESISTOR	0Ω,1/16W
R2468	NRSA6AJ-104W	MG RESISTOR	100kΩ,1/16W
R2469	NRSA6AJ-104W	MG RESISTOR	100kΩ,1/16W
R2470	NRSA6AJ-102W	MG RESISTOR	1kΩ,1/16W
R2471	NRSA6AJ-333W	MG RESISTOR	33kΩ,1/16W
R2472	NRSA6AJ-333W	MG RESISTOR	33kΩ,1/16W
R2473	NRSA6AJ-0R0W	MG RESISTOR	0Ω,1/16W
R2479	NRSA6AJ-0R0W	MG RESISTOR	0Ω,1/16W
R2480	NRSA6AJ-0R0W	MG RESISTOR	0Ω,1/16W
R2482	NRVA6AD-104W	CMF RESISTOR	100kΩ,1/16W
R2483	NRSA6AJ-820W	MG RESISTOR	82Ω,1/16W
R2484	NRSA6AJ-820W	MG RESISTOR	82Ω,1/16W
R2485	NRSA6AJ-0R0W	MG RESISTOR	0Ω,1/16W
R2486	NRSA6AJ-0R0W	MG RESISTOR	0Ω,1/16W
R2488	NRSA6AJ-101W	MG RESISTOR	100Ω,1/16W
R2489	NRSA6AJ-332W	MG RESISTOR	3.3kΩ,1/16W
R3001	NRSA63J-470X	MG RESISTOR	47Ω,1/16W
R3004	NRSA63J-0R0X	MG RESISTOR	0Ω,1/16W
R3006	NQR0129-004X	FERRITE BEAD	
R3008	NRSA63J-0R0X	MG RESISTOR	0Ω,1/16W
R3009	NRSA63J-0R0X	MG RESISTOR	0Ω,1/16W
R3010	NQR0129-004X	FERRITE BEAD	
R3011	NRSA6AJ-0R0W	MG RESISTOR	0Ω,1/16W
R3012	NRSA6AJ-0R0W	MG RESISTOR	0Ω,1/16W
R3102	NRSA6AJ-105W	MG RESISTOR	1MΩ,1/16W
R3103	NRSA6AJ-331W	MG RESISTOR	330Ω,1/16W
R3104	NQR0251-004X	FERRITE BEAD	
R3105	NRSA63J-0R0X	MG RESISTOR	0Ω,1/16W
R3106	NRSA63J-471X	MG RESISTOR	470Ω,1/16W
R3201	NRSA6AJ-222W	MG RESISTOR	2.2kΩ,1/16W
R3202	NRSA6AJ-222W	MG RESISTOR	2.2kΩ,1/16W
R3203	NRSA6AJ-391W	MG RESISTOR	390Ω,1/16W
R3204	NRSA6AJ-391W	MG RESISTOR	390Ω,1/16W
R3205	NRSA6AJ-222W	MG RESISTOR	2.2kΩ,1/16W
R3206	NRSA6AJ-562W	MG RESISTOR	5.6kΩ,1/16W
R3207	NRSA6AJ-0R0W	MG RESISTOR	0Ω,1/16W
R3209	NRSA6AJ-102W	MG RESISTOR	1kΩ,1/16W
R3210	NRSA6AJ-472W	MG RESISTOR	4.7kΩ,1/16W
R3211	NRVA6AD-512W	CMF RESISTOR	5.1kΩ,1/16W
R3212	NRVA6AD-472W	CMF RESISTOR	4.7kΩ,1/16W
R3213	NRVA6AD-152W	CMF RESISTOR	1.5kΩ,1/16W
R3214	NRVA6AD-391W	CMF RESISTOR	390Ω,1/16W
R3215	NRVA6AD-391W	CMF RESISTOR	390Ω,1/16W
R3217	NRSA6AJ-331W	MG RESISTOR	330Ω,1/16W
R3218	NRSA6AJ-331W	MG RESISTOR	330Ω,1/16W
R3219	NRSA6AJ-331W	MG RESISTOR	330Ω,1/16W
R3220	NRSA6AJ-0R0W	MG RESISTOR	0Ω,1/16W

# ⚠ REF No.	PART No.	PART NAME, DESCRIPTION	
R3221	NRVA6AD-102W	CMF RESISTOR	1kΩ,1/16W
R3222	NRVA6AD-162W	CMF RESISTOR	1.6kΩ,1/16W
R3223	NRSA6AJ-102W	MG RESISTOR	1kΩ,1/16W
R3224	NRSA6AJ-102W	MG RESISTOR	1kΩ,1/16W
R3225	NRSA6AJ-222W	MG RESISTOR	2.2kΩ,1/16W
R3226	NRVA6AD-102W	CMF RESISTOR	1kΩ,1/16W
R3227	NRVA6AD-471W	CMF RESISTOR	470Ω,1/16W
R3228	NRSA6AJ-102W	MG RESISTOR	1kΩ,1/16W
R3229	NRSA6AJ-222W	MG RESISTOR	2.2kΩ,1/16W
R3230	NRVA6AD-102W	CMF RESISTOR	1kΩ,1/16W
R3231	NRVA6AD-621W	CMF RESISTOR	620Ω,1/16W
R3232	NRSA6AJ-102W	MG RESISTOR	1kΩ,1/16W
R3233	NRSA6AJ-0R0W	MG RESISTOR	0Ω,1/16W
R3235	NRSA6AJ-0R0W	MG RESISTOR	0Ω,1/16W
R3236	NRVA6AD-561W	CMF RESISTOR	560Ω,1/16W
R3237	NRVA6AD-471W	CMF RESISTOR	470Ω,1/16W
R3601	NRSA6AJ-103W	MG RESISTOR	10kΩ,1/16W
R3602	NRSA63J-0R0X	MG RESISTOR	0Ω,1/16W
R3603	NRSA63J-0R0X	MG RESISTOR	0Ω,1/16W
R3651	NRSA6AJ-121W	MG RESISTOR	120Ω,1/16W
R4201	NRSA6AJ-221W	MG RESISTOR	220Ω,1/16W
R4202	NRSA6AJ-221W	MG RESISTOR	220Ω,1/16W
R4203	NRSA6AJ-0R0W	MG RESISTOR	0Ω,1/16W
R4204	NRSA6AJ-221W	MG RESISTOR	220Ω,1/16W
R4205	NRSA6AJ-221W	MG RESISTOR	220Ω,1/16W
R4206	NRSA6AJ-0R0W	MG RESISTOR	0Ω,1/16W
R4213	NRSA6AJ-0R0W	MG RESISTOR	0Ω,1/16W
R4214	NRSA6AJ-0R0W	MG RESISTOR	0Ω,1/16W
R4215	NRSA6AJ-0R0W	MG RESISTOR	0Ω,1/16W
R4216	NRSA6AJ-0R0W	MG RESISTOR	0Ω,1/16W
R4219	NRSA6AJ-0R0W	MG RESISTOR	0Ω,1/16W
R4226	NRSA6AJ-0R0W	MG RESISTOR	0Ω,1/16W
R4227	NRSA6AJ-0R0W	MG RESISTOR	0Ω,1/16W
R4228	NRSA6AJ-0R0W	MG RESISTOR	0Ω,1/16W
R4229	NRSA6AJ-0R0W	MG RESISTOR	0Ω,1/16W
R4232	NRSA6AJ-0R0W	MG RESISTOR	0Ω,1/16W
R4233	NRSA6AJ-0R0W	MG RESISTOR	0Ω,1/16W
R4234	NRSA6AJ-0R0W	MG RESISTOR	0Ω,1/16W
R4235	NRSA63J-0R0X	MG RESISTOR	0Ω,1/16W
R4301	NRSA6AJ-102W	MG RESISTOR	1kΩ,1/16W
R4303	NRSA6AJ-0R0W	MG RESISTOR	0Ω,1/16W
R4304	NRSA6AJ-102W	MG RESISTOR	1kΩ,1/16W
R4305	NRSA6AJ-0R0W	MG RESISTOR	0Ω,1/16W
R4306	NRSA6AJ-0R0W	MG RESISTOR	0Ω,1/16W
R4307	NRSA6AJ-102W	MG RESISTOR	1kΩ,1/16W
R4308	NRSA6AJ-331W	MG RESISTOR	330Ω,1/16W
R4309	NRSA6AJ-562W	MG RESISTOR	5.6kΩ,1/16W
R4310	NRSA6AJ-562W	MG RESISTOR	5.6kΩ,1/16W
R4311	NRSA6AJ-103W	MG RESISTOR	10kΩ,1/16W
R4312	NRSA6AJ-100W	MG RESISTOR	10Ω,1/16W
R4313	NRSA6AJ-100W	MG RESISTOR	10Ω,1/16W
R4314	NRSA6AJ-100W	MG RESISTOR	10Ω,1/16W
R4315	NRSA6AJ-102W	MG RESISTOR	1kΩ,1/16W
R4316	NRSA6AJ-0R0W	MG RESISTOR	0Ω,1/16W
R4318	NRSA6AJ-0R0W	MG RESISTOR	0Ω,1/16W
R4319	NRSA6AJ-0R0W	MG RESISTOR	0Ω,1/16W
R4320	NRSA6AJ-0R0W	MG RESISTOR	0Ω,1/16W
R4324	NRSA6AJ-0R0W	MG RESISTOR	0Ω,1/16W
R4325	NRSA6AJ-0R0W	MG RESISTOR	0Ω,1/16W
R4326	NRSA6AJ-0R0W	MG RESISTOR	0Ω,1/16W
R4327	NRSA6AJ-0R0W	MG RESISTOR	0Ω,1/16W

# ⚠ REF No.	PART No.	PART NAME, DESCRIPTION	
R4328	NRSA6AJ-0R0W	MG RESISTOR	0Ω,1/16W
R4329	NRSA6AJ-102W	MG RESISTOR	1kΩ,1/16W
R4401	NRSA6AJ-333W	MG RESISTOR	33kΩ,1/16W
R4402	NRSA6AJ-0R0W	MG RESISTOR	0Ω,1/16W
R4404	NRSA6AJ-0R0W	MG RESISTOR	0Ω,1/16W
R4405	NRSA6AJ-0R0W	MG RESISTOR	0Ω,1/16W
R4406	NRSA6AJ-0R0W	MG RESISTOR	0Ω,1/16W
R4407	NRSA6AJ-0R0W	MG RESISTOR	0Ω,1/16W
R4408	NRSA6AJ-0R0W	MG RESISTOR	0Ω,1/16W
R4409	NRSA6AJ-0R0W	MG RESISTOR	0Ω,1/16W
R4410	NRSA6AJ-0R0W	MG RESISTOR	0Ω,1/16W
R4411	NRSA6AJ-0R0W	MG RESISTOR	0Ω,1/16W
R4412	NRSA6AJ-0R0W	MG RESISTOR	0Ω,1/16W
R4413	NRSA6AJ-0R0W	MG RESISTOR	0Ω,1/16W
R4415	NRSA6AJ-0R0W	MG RESISTOR	0Ω,1/16W
R4416	NRSA6AJ-333W	MG RESISTOR	33kΩ,1/16W
R4418	NRSA6AJ-104W	MG RESISTOR	100kΩ,1/16W
R4419	NRSA6AJ-472W	MG RESISTOR	4.7kΩ,1/16W
R4420	NRSA6AJ-472W	MG RESISTOR	4.7kΩ,1/16W
R4421	NRSA6AJ-392W	MG RESISTOR	3.9kΩ,1/16W
R4422	NRSA6AJ-273W	MG RESISTOR	27kΩ,1/16W
R4423	NRSA6AJ-273W	MG RESISTOR	27kΩ,1/16W
R4424	NRSA6AJ-273W	MG RESISTOR	27kΩ,1/16W
R4425	NRSA6AJ-183W	MG RESISTOR	18kΩ,1/16W
R4426	NRSA6AJ-0R0W	MG RESISTOR	0Ω,1/16W
R4427	NRSA6AJ-102W	MG RESISTOR	1kΩ,1/16W
R4428	NRSA6AJ-102W	MG RESISTOR	1kΩ,1/16W
R4429	NRSA6AJ-102W	MG RESISTOR	1kΩ,1/16W
R4430	NRSA6AJ-0R0W	MG RESISTOR	0Ω,1/16W
R4431	NRSA6AJ-0R0W	MG RESISTOR	0Ω,1/16W
R4432	NRSA6AJ-0R0W	MG RESISTOR	0Ω,1/16W
R4434	NRSA6AJ-0R0W	MG RESISTOR	0Ω,1/16W
R4435	NRSA6AJ-473W	MG RESISTOR	47kΩ,1/16W
R4436	NRSA6AJ-102W	MG RESISTOR	1kΩ,1/16W
R4437	NRSA6AJ-102W	MG RESISTOR	1kΩ,1/16W
R4439	NRSA6AJ-102W	MG RESISTOR	1kΩ,1/16W
R4440	NRSA6AJ-154W	MG RESISTOR	150kΩ,1/16W
R4441	NRSA6AJ-154W	MG RESISTOR	150kΩ,1/16W
R4442	NRSA6AJ-154W	MG RESISTOR	150kΩ,1/16W
R4443	NRSA6AJ-223W	MG RESISTOR	22kΩ,1/16W
R4444	NRSA6AJ-153W	MG RESISTOR	15kΩ,1/16W
R4445	NRSA6AJ-103W	MG RESISTOR	10kΩ,1/16W
R4446	NRSA6AJ-221W	MG RESISTOR	220Ω,1/16W
R4447	NRSA6AJ-221W	MG RESISTOR	220Ω,1/16W
R4448	NRSA6AJ-102W	MG RESISTOR	1kΩ,1/16W
R4449	NRSA6AJ-102W	MG RESISTOR	1kΩ,1/16W
R4450	NRSA6AJ-472W	MG RESISTOR	4.7kΩ,1/16W
R4451	NRSA6AJ-472W	MG RESISTOR	4.7kΩ,1/16W
R4452	NRSA6AJ-103W	MG RESISTOR	10kΩ,1/16W
R4453	NRSA6AJ-102W	MG RESISTOR	1kΩ,1/16W
R4454	NRSA6AJ-102W	MG RESISTOR	1kΩ,1/16W
R4455	NRSA6AJ-102W	MG RESISTOR	1kΩ,1/16W
R4456	NRSA6AJ-102W	MG RESISTOR	1kΩ,1/16W
R4457	NRSA6AJ-102W	MG RESISTOR	1kΩ,1/16W
R4458	NRSA6AJ-0R0W	MG RESISTOR	0Ω,1/16W
R4459	NRSA6AJ-0R0W	MG RESISTOR	0Ω,1/16W
R4460	NRSA6AJ-102W	MG RESISTOR	1kΩ,1/16W
R4461	NRSA6AJ-0R0W	MG RESISTOR	0Ω,1/16W
R4462	NRSA6AJ-223W	MG RESISTOR	22kΩ,1/16W
R4463	NRSA6AJ-222W	MG RESISTOR	2.2kΩ,1/16W
R4464	NRSA6AJ-222W	MG RESISTOR	2.2kΩ,1/16W

# ⚠ REF No.	PART No.	PART NAME, DESCRIPTION	
R4465	NRSA6AJ-333W	MG RESISTOR	33kΩ,1/16W
R4466	NRSA6AJ-0R0W	MG RESISTOR	0Ω,1/16W
R4701	NRSA6AJ-222W	MG RESISTOR	2.2kΩ,1/16W
R4702	NRSA6AJ-103W	MG RESISTOR	10kΩ,1/16W
R4703	NRSA6AJ-105W	MG RESISTOR	1MΩ,1/16W
R4704	NRSA6AJ-472W	MG RESISTOR	4.7kΩ,1/16W
R4705	NRSA6AJ-103W	MG RESISTOR	10kΩ,1/16W
R4706	NRSA6AJ-105W	MG RESISTOR	1MΩ,1/16W
R4707	NRSA6AJ-103W	MG RESISTOR	10kΩ,1/16W
R4708	NRSA6AJ-103W	MG RESISTOR	10kΩ,1/16W
R4709	NRSA6AJ-123W	MG RESISTOR	12kΩ,1/16W
R4710	NRSA6AJ-682W	MG RESISTOR	6.8kΩ,1/16W
R4711	NRSA6AJ-392W	MG RESISTOR	3.9kΩ,1/16W
R4712	NRSA6AJ-471W	MG RESISTOR	470Ω,1/16W
R4713	NRSA6AJ-392W	MG RESISTOR	3.9kΩ,1/16W
R4714	NRSA6AJ-472W	MG RESISTOR	4.7kΩ,1/16W
R4801	NRSA6AJ-0R0W	MG RESISTOR	0Ω,1/16W
R4802	NRSA6AJ-0R0W	MG RESISTOR	0Ω,1/16W
R4803	NRSA6AJ-102W	MG RESISTOR	1kΩ,1/16W
R4804	NRSA6AJ-102W	MG RESISTOR	1kΩ,1/16W
R4805	NRSA6AJ-103W	MG RESISTOR	10kΩ,1/16W
R4806	NRSA6AJ-683W	MG RESISTOR	68kΩ,1/16W
R4807	NRSA6AJ-683W	MG RESISTOR	68kΩ,1/16W
R4808	NRSA6AJ-393W	MG RESISTOR	39kΩ,1/16W
R4809	NRSA6AJ-681W	MG RESISTOR	680Ω,1/16W
R4810	NRSA6AJ-103W	MG RESISTOR	10kΩ,1/16W
R4811	NRSA6AJ-824W	MG RESISTOR	820kΩ,1/16W
R4812	NRSA6AJ-153W	MG RESISTOR	15kΩ,1/16W
R4814	NRSA6AJ-105W	MG RESISTOR	1MΩ,1/16W
R4815	NRSA6AJ-472W	MG RESISTOR	4.7kΩ,1/16W
R4816	NRSA6AJ-0R0W	MG RESISTOR	0Ω,1/16W
R4817	NRSA6AJ-134W	MG RESISTOR	130kΩ,1/16W
R4818	NRSA6AJ-473W	MG RESISTOR	47kΩ,1/16W
R4819	NRSA6AJ-123W	MG RESISTOR	12kΩ,1/16W
R4820	NRSA6AJ-104W	MG RESISTOR	100kΩ,1/16W
R4821	NRSA6AJ-104W	MG RESISTOR	100kΩ,1/16W
R4822	NRSA6AJ-333W	MG RESISTOR	33kΩ,1/16W
R4823	NRSA6AJ-911W	MG RESISTOR	910Ω,1/16W
R4824	NRSA6AJ-472W	MG RESISTOR	4.7kΩ,1/16W
R4830	NRSA6AJ-152W	MG RESISTOR	1.5kΩ,1/16W
R4832	NRSA6AJ-0R0W	MG RESISTOR	0Ω,1/16W
R4833	NRSA6AJ-104W	MG RESISTOR	100kΩ,1/16W
R4836	NRSA6AJ-103W	MG RESISTOR	10kΩ,1/16W
R4837	NRSA6AJ-0R0W	MG RESISTOR	0Ω,1/16W
R4838	NRSA6AJ-0R0W	MG RESISTOR	0Ω,1/16W
R4851	NRSA6AJ-182W	MG RESISTOR	1.8kΩ,1/16W
R4852	NRSA6AJ-562W	MG RESISTOR	5.6kΩ,1/16W
R4853	NRSA6AJ-271W	MG RESISTOR	270Ω,1/16W
R4854	NRSA6AJ-153W	MG RESISTOR	15kΩ,1/16W
R4855	NRSA6AJ-153W	MG RESISTOR	15kΩ,1/16W
R4856	NRSA63J-3R6X	MG RESISTOR	3.6Ω,1/16W
R4857	NRSA63J-3R6X	MG RESISTOR	3.6Ω,1/16W
R4858	NRSA6AJ-153W	MG RESISTOR	15kΩ,1/16W
R4859	NRSA6AJ-153W	MG RESISTOR	15kΩ,1/16W
R4860	NRSA63J-4R3X	MG RESISTOR	4.3Ω,1/16W
R4861	NRSA63J-4R3X	MG RESISTOR	4.3Ω,1/16W
R4862	NRSA63J-100X	MG RESISTOR	10Ω,1/16W
R4863	NRSA63J-100X	MG RESISTOR	10Ω,1/16W
R7001	NRSA6AJ-0R0W	MG RESISTOR	0Ω,1/16W
R7002	NRVA6AD-563W	CMF RESISTOR	56kΩ,1/16W
R7003	NRVA6AD-223W	CMF RESISTOR	22kΩ,1/16W

# ⚠ REF No.	PART No.	PART NAME, DESCRIPTION	
R7004	NRSA6AJ-0R0W	MG RESISTOR	0Ω,1/16W
R7005	NRVA6AD-563W	CMF RESISTOR	56kΩ,1/16W
R7006	NRVA6AD-333W	CMF RESISTOR	33kΩ,1/16W
R7007	NRSA6AJ-153W	MG RESISTOR	15kΩ,1/16W
R7008	NRSA6AJ-0R0W	MG RESISTOR	0Ω,1/16W
R7009	NRVA6AD-683W	CMF RESISTOR	68kΩ,1/16W
R7010	NRVA6AD-333W	CMF RESISTOR	33kΩ,1/16W
R7012	NRSA6AJ-222W	MG RESISTOR	2.2kΩ,1/16W
R7014	NRSA6AJ-272W	MG RESISTOR	2.7kΩ,1/16W
R7015	NRSA6AJ-561W	MG RESISTOR	560Ω,1/16W
R7016	NRSA6AJ-274W	MG RESISTOR	270kΩ,1/16W
R7017	NRSA6AJ-103W	MG RESISTOR	10kΩ,1/16W
R7018	NRSA6AJ-102W	MG RESISTOR	1kΩ,1/16W
R7019	NRSA6AJ-333W	MG RESISTOR	33kΩ,1/16W
R7020	NRSA6AJ-103W	MG RESISTOR	10kΩ,1/16W
R7021	NRVA6AD-122W	CMF RESISTOR	1.2kΩ,1/16W
R7022	NRVA6AD-182W	CMF RESISTOR	1.8kΩ,1/16W
R7023	NRSA6AJ-0R0W	MG RESISTOR	0Ω,1/16W
R7024	NRSA6AJ-0R0W	MG RESISTOR	0Ω,1/16W
R7025	NRVA6AD-153W	CMF RESISTOR	15kΩ,1/16W
R7026	NRVA6AD-272W	CMF RESISTOR	2.7kΩ,1/16W
R7027	NRVA6AD-153W	CMF RESISTOR	15kΩ,1/16W
R7028	NRVA6AD-153W	CMF RESISTOR	15kΩ,1/16W
R7029	NRVA6AD-683W	CMF RESISTOR	68kΩ,1/16W
R7030	NRVA6AD-563W	CMF RESISTOR	56kΩ,1/16W
R7032	NRSA6AJ-563W	MG RESISTOR	56kΩ,1/16W
R7033	NRSA6AJ-223W	MG RESISTOR	22kΩ,1/16W
R7034	NRSA6AJ-0R0W	MG RESISTOR	0Ω,1/16W
R7035	NRSA6AJ-104W	MG RESISTOR	100kΩ,1/16W
R7036	NRSA6AJ-563W	MG RESISTOR	56kΩ,1/16W
R7037	NRSA6AJ-104W	MG RESISTOR	100kΩ,1/16W
R8001	NRSA6AJ-103W	MG RESISTOR	10kΩ,1/16W
R8002	NRSA6AJ-103W	MG RESISTOR	10kΩ,1/16W
R8003	NRSA6AJ-105W	MG RESISTOR	1MΩ,1/16W
R8004	NRSA6AJ-103W	MG RESISTOR	10kΩ,1/16W
R8007	NRSA6AJ-0R0W	MG RESISTOR	0Ω,1/16W
R8008	NRSA6AJ-331W	MG RESISTOR	330Ω,1/16W
R8009	NRSA6AJ-102W	MG RESISTOR	1kΩ,1/16W
R8010	NRSA6AJ-102W	MG RESISTOR	1kΩ,1/16W
R8011	NRSA6AJ-102W	MG RESISTOR	1kΩ,1/16W
R8012	NRSA6AJ-103W	MG RESISTOR	10kΩ,1/16W
R8013	NRSA6AJ-103W	MG RESISTOR	10kΩ,1/16W
R8017	NRSA6AJ-394W	MG RESISTOR	390kΩ,1/16W
R8018	NRVA6AD-332W	CMF RESISTOR	3.3kΩ,1/16W
R8019	NRVA6AD-272W	CMF RESISTOR	2.7kΩ,1/16W
R8021	NRSA6AJ-102W	MG RESISTOR	1kΩ,1/16W
R8022	NRSA6AJ-560W	MG RESISTOR	56Ω,1/16W
R8023	NRSA6AJ-560W	MG RESISTOR	56Ω,1/16W
R8024	NRSA6AJ-560W	MG RESISTOR	56Ω,1/16W
R8025	NRSA6AJ-560W	MG RESISTOR	56Ω,1/16W
R8026	NRSA6AJ-391W	MG RESISTOR	390Ω,1/16W
R8027	NRSA6AJ-472W	MG RESISTOR	4.7kΩ,1/16W
R8031	NRSA6AJ-0R0W	MG RESISTOR	0Ω,1/16W
R8034	NRSA6AJ-104W	MG RESISTOR	100kΩ,1/16W
R8035	NRSA6AJ-101W	MG RESISTOR	100Ω,1/16W
R8036	NRSA6AJ-101W	MG RESISTOR	100Ω,1/16W
R8037	NRSA6AJ-101W	MG RESISTOR	100Ω,1/16W
R8038	NRSA6AJ-101W	MG RESISTOR	100Ω,1/16W
R8039	NRSA6AJ-101W	MG RESISTOR	100Ω,1/16W
R8040	NRSA6AJ-101W	MG RESISTOR	100Ω,1/16W
R8041	NRSA6AJ-101W	MG RESISTOR	100Ω,1/16W

# ⚠ REF No.	PART No.	PART NAME, DESCRIPTION	
R8042	NRSA6AJ-101W	MG RESISTOR	100Ω,1/16W
R8043	NRSA6AJ-101W	MG RESISTOR	100Ω,1/16W
R8044	NRSA6AJ-102W	MG RESISTOR	1kΩ,1/16W
R8045	NRSA6AJ-102W	MG RESISTOR	1kΩ,1/16W
R8046	NRSA6AJ-102W	MG RESISTOR	1kΩ,1/16W
R8047	NRSA6AJ-102W	MG RESISTOR	1kΩ,1/16W
R8050	NRSA6AJ-102W	MG RESISTOR	1kΩ,1/16W
R8051	NRSA6AJ-104W	MG RESISTOR	100kΩ,1/16W
R8052	NRSA6AJ-104W	MG RESISTOR	100kΩ,1/16W
R8053	NRSA6AJ-472W	MG RESISTOR	4.7kΩ,1/16W
R8054	NRSA6AJ-472W	MG RESISTOR	4.7kΩ,1/16W
R8055	NRSA6AJ-472W	MG RESISTOR	4.7kΩ,1/16W
RA1001	NRZ0033-102W	NETWORK RESISTOR	1kΩ
RA1002	NRZ0034-102W	NETWORK RESISTOR	1kΩ
RA1003	NRZ0034-102W	NETWORK RESISTOR	1kΩ
RA1004	NRZ0034-102W	NETWORK RESISTOR	1kΩ
RA1005	NRZ0033-102W	NETWORK RESISTOR	1kΩ
RA1006	NRZ0033-472W	NETWORK RESISTOR	4.7kΩ
RA1007	NRZ0034-103W	NETWORK RESISTOR	10kΩ
RA1010	NRZ0034-473W	NETWORK RESISTOR	47kΩ
RA1402	NRZ0033-472W	NETWORK RESISTOR	4.7kΩ
RA1403	NRZ0034-473W	NETWORK RESISTOR	47kΩ
RA1404	NRZ0034-102W	NETWORK RESISTOR	1kΩ
RA1406	NRZ0034-102W	NETWORK RESISTOR	1kΩ
RA3001	NRZ0034-221W	NETWORK RESISTOR	220Ω
RA3002	NRZ0034-221W	NETWORK RESISTOR	220Ω
RA3003	NRZ0034-221W	NETWORK RESISTOR	220Ω
RA3101	NRZ0034-100W	NETWORK RESISTOR	10Ω
RA3102	NRZ0034-100W	NETWORK RESISTOR	10Ω
RA3103	NRZ0034-100W	NETWORK RESISTOR	10Ω
RA3104	NRZ0034-100W	NETWORK RESISTOR	10Ω
RA3201	NRZ0034-100W	NETWORK RESISTOR	10Ω
RA3202	NRZ0034-100W	NETWORK RESISTOR	10Ω
RA3203	NRZ0034-100W	NETWORK RESISTOR	10Ω
RA3204	NRZ0034-100W	NETWORK RESISTOR	10Ω
RA3205	NRZ0034-100W	NETWORK RESISTOR	10Ω
RA3206	NRZ0034-100W	NETWORK RESISTOR	10Ω
RA3651	NRZ0034-101W	NETWORK RESISTOR	100Ω
RA3652	NRZ0034-101W	NETWORK RESISTOR	100Ω
RA4201	NRZ0034-221W	NETWORK RESISTOR	220Ω
RA4202	NRZ0034-221W	NETWORK RESISTOR	220Ω
RA4203	NRZ0034-221W	NETWORK RESISTOR	220Ω
RA4204	NRZ0034-221W	NETWORK RESISTOR	220Ω
RA4301	NRZ0034-221W	NETWORK RESISTOR	220Ω
RA4302	NRZ0034-221W	NETWORK RESISTOR	220Ω
RA4303	NRZ0034-221W	NETWORK RESISTOR	220Ω
RA4304	NRZ0034-221W	NETWORK RESISTOR	220Ω
RA4305	NRZ0034-221W	NETWORK RESISTOR	220Ω
RA4306	NRZ0034-221W	NETWORK RESISTOR	220Ω
RA4307	NRZ0034-221W	NETWORK RESISTOR	220Ω
RA4308	NRZ0034-221W	NETWORK RESISTOR	220Ω
RA4309	NRZ0034-221W	NETWORK RESISTOR	220Ω
RA4310	NRZ0034-221W	NETWORK RESISTOR	220Ω
B3001	NRSA6AJ-0R0W	MG RESISTOR	0Ω,1/16W
B3002	NRSA6AJ-0R0W	MG RESISTOR	0Ω,1/16W
C1001	NBE20JM-226X	T CAPACITOR	22μF,6.3V
C1002	NBE20JM-226X	T CAPACITOR	22μF,6.3V
C1003	NCFA1AZ-104W	CAPACITOR	0.1μF,10V
C1004	NCFA1AZ-104W	CAPACITOR	0.1μF,10V
C1005	NCFA1AZ-104W	CAPACITOR	0.1μF,10V
C1010	NCBA1CK-103W	CAPACITOR	0.01μF,16V

# ⚠ REF No.	PART No.	PART NAME, DESCRIPTION	
C1011	NCBA1CK-103W	CAPACITOR	0.01μF,16V
C1012	NCBA1CK-103W	CAPACITOR	0.01μF,16V
C1013	NCBA1CK-103W	CAPACITOR	0.01μF,16V
C1014	NCBA1CK-103W	CAPACITOR	0.01μF,16V
C1017	NCB21EK-104X	CAPACITOR	0.1μF,25V
C1018	NCB31CK-473X	CAPACITOR	0.047μF,16V
C1020	NCF21CZ-105X	CAPACITOR	1μF,16V
C1021	PECA1173	T CAPACITOR	100μF,4V
C1022	PECA1173	T CAPACITOR	100μF,4V
C1023	NBE41CM-106X	T CAPACITOR	10μF,16V
C1025	NCFA1AZ-104W	CAPACITOR	0.1μF,10V
C1026	NBE20JM-226X	T CAPACITOR	22μF,6.3V
C1401	NCB31CK-223X	CAPACITOR	0.022μF,16V
C1402	NCB31CK-223X	CAPACITOR	0.022μF,16V
C1403	NCB31CK-223X	CAPACITOR	0.022μF,16V
C1404	NCB31CK-223X	CAPACITOR	0.022μF,16V
C1405	NCFA1AZ-104W	CAPACITOR	0.1μF,10V
C1406	NCFA1AZ-104W	CAPACITOR	0.1μF,10V
C1409	NCFA1AZ-104W	CAPACITOR	0.1μF,10V
C1410	NDCA1HJ-150W	CAPACITOR	15pF,50V
C1411	NDCA1HJ-150W	CAPACITOR	15pF,50V
C1412	NBE21CM-105X	T CAPACITOR	1μF,16V
C1415	NCFA1AZ-104W	CAPACITOR	0.1μF,10V
C1416	NCBA1EK-682W	CAPACITOR	0.0068μF,25V
C1418	NCFA1AZ-104W	CAPACITOR	0.1μF,10V
C1419	NCF21CZ-684X	CAPACITOR	0.68μF,16V
C1420	NBE20JM-226X	T CAPACITOR	22μF,6.3V
C1421	NBE20JM-226X	T CAPACITOR	22μF,6.3V
C1422	NBE21CM-105X	T CAPACITOR	1μF,16V
C1423	NBE20JM-226X	T CAPACITOR	22μF,6.3V
C1452	NDCA1HJ-180W	CAPACITOR	18pF,50V
C1453	NDCA1HJ-330W	CAPACITOR	33pF,50V
C1454	NCBA1CK-103W	CAPACITOR	0.01μF,16V
C1455	NCFA1AZ-104W	CAPACITOR	0.1μF,10V
C1456	NCFA1AZ-104W	CAPACITOR	0.1μF,10V
C1457	NDCA1HJ-120W	CAPACITOR	12pF,50V
C1458	NDCA1HJ-120W	CAPACITOR	12pF,50V
C2001	NCF31CZ-104X	CAPACITOR	0.1μF,16V
C2002	NBM90JM-106X	T CAPACITOR	10μF,6.3V
C2003	NCF31CZ-104X	CAPACITOR	0.1μF,16V
C2004	NBM90JM-106X	T CAPACITOR	10μF,6.3V
C2005	NDCA1HJ-120W	CAPACITOR	12pF,50V
C2006	NDCA1HJ-120W	CAPACITOR	12pF,50V
C2007	NDCA1HJ-7R0W	CAPACITOR	7pF,50V
C2008	NDCA1HJ-7R0W	CAPACITOR	7pF,50V
C2021	NBE21CM-105X	T CAPACITOR	1μF,16V
C2022	NDCA1HJ-180W	CAPACITOR	18pF,50V
C2023	NCBA1EK-682W	CAPACITOR	0.0068μF,25V
C2024	NDCA1HJ-180W	CAPACITOR	18pF,50V
C2025	NCBA1EK-682W	CAPACITOR	0.0068μF,25V
C2026	NBE20GM-226X	T CAPACITOR	22μF,4.0V
C2027	NCF31CZ-104X	CAPACITOR	0.1μF,16V
C2028	NBE20JM-106X	T CAPACITOR	10μF,6.3V
C2029	NBE21AM-225X	T CAPACITOR	2.2μF,10V
C2030	NCF31CZ-104X	CAPACITOR	0.1μF,16V
C2031	NBM90JM-106X	T CAPACITOR	10μF,6.3V
C2032	NBE21AM-225X	T CAPACITOR	2.2μF,10V
C2033	NCF31CZ-104X	CAPACITOR	0.1μF,16V
C2034	NBM90JM-106X	T CAPACITOR	10μF,6.3V
C2035	NDCA1HJ-220W	CAPACITOR	22pF,50V
C2036	NCBA1EK-682W	CAPACITOR	0.0068μF,25V

# ⚠ REF No.	PART No.	PART NAME, DESCRIPTION	
C2039	NDCA1HJ-101W	CAPACITOR	100pF,50V
C2351	NBE20JM-226X	T CAPACITOR	22μF,6.3V
C2352	NCBA1CK-103W	CAPACITOR	0.01μF,16V
C2353	NBE20JM-226X	T CAPACITOR	22μF,6.3V
C2354	NCBA1CK-103W	CAPACITOR	0.01μF,16V
C2355	NDCA1HJ-101W	CAPACITOR	100pF,50V
C2356	NBE21VM-104X	T CAPACITOR	0.1μF,35V
C2357	NCBA1CK-103W	CAPACITOR	0.01μF,16V
C2358	NBE20JM-226X	T CAPACITOR	22μF,6.3V
C2359	NDCA1HJ-6R0W	CAPACITOR	6pF,50V
C2360	NRSA6AJ-0R0W	MG RESISTOR	0Ω,1/16W
C2361	NBE21EM-474X	T CAPACITOR	0.47μF,25V
C2362	NDCA1HJ-100W	CAPACITOR	10pF,50V
C2364	NDCA1HJ-100W	CAPACITOR	10pF,50V
C2402	NCF21CZ-105X	CAPACITOR	1μF,16V
C2403	NCF21CZ-105X	CAPACITOR	1μF,16V
C2404	NBE90JM-475X	T CAPACITOR	4.7μF,6.3V
C2405	NCF21CZ-105X	CAPACITOR	1μF,16V
C2406	NCF21CZ-105X	CAPACITOR	1μF,16V
C2407	NBM90JM-106X	T CAPACITOR	10μF,6.3V
C2411	NCBA1HK-152W	CAPACITOR	0.0015μF,50V
C2412	NCBA1HK-152W	CAPACITOR	0.0015μF,50V
C2413	NCB21CK-224X	CAPACITOR	0.22μF,16V
C2414	NCB21CK-224X	CAPACITOR	0.22μF,16V
C2415	NBE20JM-226X	T CAPACITOR	22μF,6.3V
C2416	NBM90JM-106X	T CAPACITOR	10μF,6.3V
C2417	NBM90JM-106X	T CAPACITOR	10μF,6.3V
C2418	NCB31CK-473X	CAPACITOR	0.047μF,16V
C2419	NCB31CK-473X	CAPACITOR	0.047μF,16V
C2420	NCB31HK-332X	CAPACITOR	0.0033μF,50V
C2423	NBM90JM-106X	T CAPACITOR	10μF,6.3V
C2424	NBE40JM-476X	T CAPACITOR	47μF,6.3V
C2435	NCB31CK-104X	CAPACITOR	0.1μF,16V
C2436	NCB31HK-332X	CAPACITOR	0.0033μF,50V
C2438	NBE20JM-106X	T CAPACITOR	10μF,6.3V
C2439	NCBA1EK-682W	CAPACITOR	0.0068μF,25V
C2440	NCBA1CK-103W	CAPACITOR	0.01μF,16V
C2441	NCBA1CK-103W	CAPACITOR	0.01μF,16V
C3001	NBE40JM-476X	T CAPACITOR	47μF,6.3V
C3003	NBE20JM-106X	T CAPACITOR	10μF,6.3V
C3004	NBE20JM-106X	T CAPACITOR	10μF,6.3V
C3005	NCFA1AZ-104W	CAPACITOR	0.1μF,10V
C3006	NBE20JM-106X	T CAPACITOR	10μF,6.3V
C3007	NCFA1AZ-104W	CAPACITOR	0.1μF,10V
C3008	NBE20JM-106X	T CAPACITOR	10μF,6.3V
C3009	NCFA1AZ-104W	CAPACITOR	0.1μF,10V
C3010	NCFA1AZ-104W	CAPACITOR	0.1μF,10V
C3011	NCFA1AZ-104W	CAPACITOR	0.1μF,10V
C3012	NBE20JM-106X	T CAPACITOR	10μF,6.3V
C3013	NBE20JM-106X	T CAPACITOR	10μF,6.3V
C3014	NBE20JM-106X	T CAPACITOR	10μF,6.3V
C3015	NCBA1CK-103W	CAPACITOR	0.01μF,16V
C3016	NCBA1CK-103W	CAPACITOR	0.01μF,16V
C3017	NCBA1CK-103W	CAPACITOR	0.01μF,16V
C3018	NCBA1CK-103W	CAPACITOR	0.01μF,16V
C3019	NCBA1CK-103W	CAPACITOR	0.01μF,16V
C3020	NCBA1CK-103W	CAPACITOR	0.01μF,16V
C3021	NCBA1CK-103W	CAPACITOR	0.01μF,16V
C3022	NCBA1CK-103W	CAPACITOR	0.01μF,16V
C3023	NCBA1CK-103W	CAPACITOR	0.01μF,16V
C3024	NCBA1CK-103W	CAPACITOR	0.01μF,16V

# ⚠ REF No.	PART No.	PART NAME, DESCRIPTION	
C3025	NCBA1CK-103W	CAPACITOR	0.01μF,16V
C3026	NCBA1CK-103W	CAPACITOR	0.01μF,16V
C3027	NCBA1CK-103W	CAPACITOR	0.01μF,16V
C3028	NCBA1CK-103W	CAPACITOR	0.01μF,16V
C3029	NCBA1CK-103W	CAPACITOR	0.01μF,16V
C3030	NCBA1CK-103W	CAPACITOR	0.01μF,16V
C3031	NCBA1CK-103W	CAPACITOR	0.01μF,16V
C3032	NCBA1CK-103W	CAPACITOR	0.01μF,16V
C3033	NCBA1CK-103W	CAPACITOR	0.01μF,16V
C3034	NCBA1CK-103W	CAPACITOR	0.01μF,16V
C3035	NCBA1CK-103W	CAPACITOR	0.01μF,16V
C3102	NCFA1AZ-104W	CAPACITOR	0.1μF,10V
C3103	NBE20JM-106X	T CAPACITOR	10μF,6.3V
C3104	NCFA1AZ-104W	CAPACITOR	0.1μF,10V
C3106	NBE20JM-106X	T CAPACITOR	10μF,6.3V
C3107	NCFA1AZ-104W	CAPACITOR	0.1μF,10V
C3108	NDCA1HJ-100W	CAPACITOR	10pF,50V
C3109	NDCA1HJ-100W	CAPACITOR	10pF,50V
C3110	NBE20JM-106X	T CAPACITOR	10μF,6.3V
C3201	NCBA1CK-103W	CAPACITOR	0.01μF,16V
C3202	NCBA1CK-103W	CAPACITOR	0.01μF,16V
C3203	NCBA1CK-103W	CAPACITOR	0.01μF,16V
C3204	NCB21AK-105X	CAPACITOR	1μF,10V
C3205	NCBA1CK-103W	CAPACITOR	0.01μF,16V
C3206	NBE40JM-476X	T CAPACITOR	47μF,6.3V
C3207	NCB21AK-105X	CAPACITOR	1μF,10V
C3208	NCBA1CK-103W	CAPACITOR	0.01μF,16V
C3209	NCBA1CK-103W	CAPACITOR	0.01μF,16V
C3210	NBE20GM-226X	T CAPACITOR	22μF,4.0V
C3211	NCBA1CK-103W	CAPACITOR	0.01μF,16V
C3212	NCBA1CK-103W	CAPACITOR	0.01μF,16V
C3213	NCBA1CK-103W	CAPACITOR	0.01μF,16V
C3214	NCB21AK-105X	CAPACITOR	1μF,10V
C3215	NBE20GM-226X	T CAPACITOR	22μF,4.0V
C3216	NCB21AK-105X	CAPACITOR	1μF,10V
C3217	NCBA1CK-103W	CAPACITOR	0.01μF,16V
C3218	NBE20GM-226X	T CAPACITOR	22μF,4.0V
C3219	NCBA1CK-103W	CAPACITOR	0.01μF,16V
C3220	NCBA1CK-103W	CAPACITOR	0.01μF,16V
C3221	NCBA1CK-103W	CAPACITOR	0.01μF,16V
C3222	NCB21AK-105X	CAPACITOR	1μF,10V
C3223	NCBA1CK-103W	CAPACITOR	0.01μF,16V
C3224	NCBA1CK-103W	CAPACITOR	0.01μF,16V
C3225	NCBA1CK-103W	CAPACITOR	0.01μF,16V
C3226	NCBA1CK-103W	CAPACITOR	0.01μF,16V
C3227	NBE40JM-476X	T CAPACITOR	47μF,6.3V
C3231	NCB21AK-105X	CAPACITOR	1μF,10V
C3232	NCB21AK-105X	CAPACITOR	1μF,10V
C3601	NCBA1CK-103W	CAPACITOR	0.01μF,16V
C3602	NCFA1AZ-104W	CAPACITOR	0.1μF,10V
C3603	NBE20JM-106X	T CAPACITOR	10μF,6.3V
C3604	NCBA1CK-103W	CAPACITOR	0.01μF,16V
C3651	NCBA1HK-681W	CAPACITOR	680pF,50V
C3652	NBE40JM-476X	T CAPACITOR	47μF,6.3V
C3653	NCBA1CK-103W	CAPACITOR	0.01μF,16V
C3654	NCFA1AZ-104W	CAPACITOR	0.1μF,10V
C3655	NBE20JM-106X	T CAPACITOR	10μF,6.3V
C3656	NCFA1AZ-104W	CAPACITOR	0.1μF,10V
C4201	NCFA1AZ-104W	CAPACITOR	0.1μF,10V
C4202	NBE90JM-106X	T CAPACITOR	10μF,6.3V
C4203	NCFA1AZ-104W	CAPACITOR	0.1μF,10V

# ⚠ REF No.	PART No.	PART NAME, DESCRIPTION	
C4204	NBE90JM-106X	T CAPACITOR	10μF,6.3V
C4205	NCFA1AZ-104W	CAPACITOR	0.1μF,10V
C4206	NBE90JM-106X	T CAPACITOR	10μF,6.3V
C4207	NCFA1AZ-104W	CAPACITOR	0.1μF,10V
C4208	NBE90JM-106X	T CAPACITOR	10μF,6.3V
C4209	NCFA1AZ-104W	CAPACITOR	0.1μF,10V
C4210	NCFA1AZ-104W	CAPACITOR	0.1μF,10V
C4211	NCFA1AZ-104W	CAPACITOR	0.1μF,10V
C4212	NCFA1AZ-104W	CAPACITOR	0.1μF,10V
C4213	NCFA1AZ-104W	CAPACITOR	0.1μF,10V
C4214	NBE90JM-106X	T CAPACITOR	10μF,6.3V
C4215	NCFA1AZ-104W	CAPACITOR	0.1μF,10V
C4216	NCFA1AZ-104W	CAPACITOR	0.1μF,10V
C4217	NCFA1AZ-104W	CAPACITOR	0.1μF,10V
C4218	NCFA1AZ-104W	CAPACITOR	0.1μF,10V
C4219	NCFA1AZ-104W	CAPACITOR	0.1μF,10V
C4220	NBE90JM-106X	T CAPACITOR	10μF,6.3V
C4225	NRSA6AJ-0R0W	MG RESISTOR	0Ω,1/16W
C4233	NRSA6AJ-0R0W	MG RESISTOR	0Ω,1/16W
C4237	NBE40JM-476X	T CAPACITOR	47μF,6.3V
C4238	NCFA1AZ-104W	CAPACITOR	0.1μF,10V
C4239	NBE90JM-106X	T CAPACITOR	10μF,6.3V
C4240	NCFA1AZ-104W	CAPACITOR	0.1μF,10V
C4301	NBE90JM-106X	T CAPACITOR	10μF,6.3V
C4302	NCFA1AZ-104W	CAPACITOR	0.1μF,10V
C4303	NBE90JM-106X	T CAPACITOR	10μF,6.3V
C4304	NCFA1AZ-104W	CAPACITOR	0.1μF,10V
C4305	NCFA1AZ-104W	CAPACITOR	0.1μF,10V
C4306	NCFA1AZ-104W	CAPACITOR	0.1μF,10V
C4307	NCFA1AZ-104W	CAPACITOR	0.1μF,10V
C4308	NCFA1AZ-104W	CAPACITOR	0.1μF,10V
C4309	NCB31CK-104X	CAPACITOR	0.1μF,16V
C4310	NCFA1AZ-104W	CAPACITOR	0.1μF,10V
C4311	NCFA1AZ-104W	CAPACITOR	0.1μF,10V
C4312	NCB31CK-104X	CAPACITOR	0.1μF,16V
C4313	NCFA1AZ-104W	CAPACITOR	0.1μF,10V
C4314	NCF31AZ-105X	CAPACITOR	1μF,10V
C4315	NCF31AZ-105X	CAPACITOR	1μF,10V
C4316	NBE90JM-106X	T CAPACITOR	10μF,6.3V
C4317	NCFA1AZ-104W	CAPACITOR	0.1μF,10V
C4318	NCFA1AZ-104W	CAPACITOR	0.1μF,10V
C4319	NCFA1AZ-104W	CAPACITOR	0.1μF,10V
C4320	NCFA1AZ-104W	CAPACITOR	0.1μF,10V
C4321	NCFA1AZ-104W	CAPACITOR	0.1μF,10V
C4322	NCFA1AZ-104W	CAPACITOR	0.1μF,10V
C4323	NCFA1AZ-104W	CAPACITOR	0.1μF,10V
C4324	NCFA1AZ-104W	CAPACITOR	0.1μF,10V
C4325	NCFA1AZ-104W	CAPACITOR	0.1μF,10V
C4326	NCFA1AZ-104W	CAPACITOR	0.1μF,10V
C4327	NBE90JM-106X	T CAPACITOR	10μF,6.3V
C4328	NBE90JM-106X	T CAPACITOR	10μF,6.3V
C4329	NCFA1AZ-104W	CAPACITOR	0.1μF,10V
C4330	NCFA1AZ-104W	CAPACITOR	0.1μF,10V
C4331	NBE90JM-106X	T CAPACITOR	10μF,6.3V
C4332	NCB31CK-104X	CAPACITOR	0.1μF,16V
C4334	NCFA1AZ-104W	CAPACITOR	0.1μF,10V
C4335	NDCA1HJ-101W	CAPACITOR	100pF,50V
C4336	NCFA1AZ-104W	CAPACITOR	0.1μF,10V
C4401	NCBA1CK-103W	CAPACITOR	0.01μF,16V
C4402	NBE91CM-105X	T CAPACITOR	1μF,16V
C4403	NBE90JM-106X	T CAPACITOR	10μF,6.3V

# ⚠ REF No.	PART No.	PART NAME, DESCRIPTION	
C4405	NCBA1CK-103W	CAPACITOR	0.01μF,16V
C4406	NCBA1HK-102W	CAPACITOR	0.001μF,50V
C4407	NCBA1HK-102W	CAPACITOR	0.001μF,50V
C4408	NCBA1HK-102W	CAPACITOR	0.001μF,50V
C4409	NCBA1HK-102W	CAPACITOR	0.001μF,50V
C4410	NCFA1AZ-104W	CAPACITOR	0.1μF,10V
C4411	NCBA1CK-103W	CAPACITOR	0.01μF,16V
C4412	NBE91CM-105X	T CAPACITOR	1μF,16V
C4413	NCBA1CK-103W	CAPACITOR	0.01μF,16V
C4414	NCFA1AZ-104W	CAPACITOR	0.1μF,10V
C4415	NCFA1AZ-104W	CAPACITOR	0.1μF,10V
C4416	NBM90JM-106X	T CAPACITOR	10μF,6.3V
C4417	NCBA1CK-103W	CAPACITOR	0.01μF,16V
C4418	NCBA1CK-103W	CAPACITOR	0.01μF,16V
C4701	NCBA1CK-103W	CAPACITOR	0.01μF,16V
C4702	NBM90JM-106X	T CAPACITOR	10μF,6.3V
C4703	NBE21DM-335X	T CAPACITOR	3.3μF,20V
C4704	NCBA1CK-103W	CAPACITOR	0.01μF,16V
C4705	NCB31EK-223X	CAPACITOR	0.022μF,25V
C4706	NCB31EK-223X	CAPACITOR	0.022μF,25V
C4707	NCB21AK-105X	CAPACITOR	1μF,10V
C4708	NCB21AK-105X	CAPACITOR	1μF,10V
C4801	NBE21AM-106X	T CAPACITOR	10μF,10V
C4802	NCB31CK-104X	CAPACITOR	0.1μF,16V
C4803	NBM90JM-106X	T CAPACITOR	10μF,6.3V
C4804	NCFA1AZ-104W	CAPACITOR	0.1μF,10V
C4805	NCFA1AZ-104W	CAPACITOR	0.1μF,10V
C4806	NCFA1AZ-104W	CAPACITOR	0.1μF,10V
C4808	NCF21CZ-105X	CAPACITOR	1μF,16V
C4809	NCFA1AZ-104W	CAPACITOR	0.1μF,10V
C4810	NCFA1HZ-103W	CAPACITOR	0.01μF,50V
C4811	NCFA1HZ-103W	CAPACITOR	0.01μF,50V
C4812	NCFA1AZ-104W	CAPACITOR	0.1μF,10V
C4813	NCFA1AZ-104W	CAPACITOR	0.1μF,10V
C4814	NCFA1AZ-104W	CAPACITOR	0.1μF,10V
C4815	NDC31HJ-101X	CAPACITOR	100pF,50V
C4818	NCB31CK-104X	CAPACITOR	0.1μF,16V
C4819	NCB21CK-104X	CAPACITOR	0.1μF,16V
C4821	NCB31CK-104X	CAPACITOR	0.1μF,16V
C4822	NDCA1HJ-101W	CAPACITOR	100pF,50V
C4851	NBM90JM-106X	T CAPACITOR	10μF,6.3V
C4852	NCFA1AZ-104W	CAPACITOR	0.1μF,10V
C4853	NBE91AM-335X	T CAPACITOR	3.3μF,10V
C4854	NBE21AM-106X	T CAPACITOR	10μF,10V
C4855	NCB31CK-104X	CAPACITOR	0.1μF,16V
C4856	NCFA1AZ-104W	CAPACITOR	0.1μF,10V
C4857	NCFA1AZ-104W	CAPACITOR	0.1μF,10V
C4858	NCFA1HZ-103W	CAPACITOR	0.01μF,50V
C4859	NCFA1HZ-103W	CAPACITOR	0.01μF,50V
C4860	NCFA1CZ-473W	CAPACITOR	0.047μF,16V
C4861	NCFA1HZ-332W	CAPACITOR	0.033μF,50V
C4862	NCFA1HZ-332W	CAPACITOR	0.033μF,50V
C4863	NCFA1HZ-332W	CAPACITOR	0.033μF,50V
C4864	NCFA1HZ-332W	CAPACITOR	0.033μF,50V
C4865	NCFA1HZ-103W	CAPACITOR	0.01μF,50V
C4866	NCFA1HZ-103W	CAPACITOR	0.01μF,50V
C4867	NCFA1CZ-473W	CAPACITOR	0.047μF,16V
C4868	NCFA1HZ-332W	CAPACITOR	0.033μF,50V
C7001	NCF21CZ-105X	CAPACITOR	1μF,16V
C7002	NCBA1CK-103W	CAPACITOR	0.01μF,16V
C7003	NBM90JM-106X	T CAPACITOR	10μF,6.3V

# ⚠ REF No.	PART No.	PART NAME, DESCRIPTION	
C7004	NCBA1CK-103W	CAPACITOR	0.01μF,16V
C7006	NCFA1AZ-104W	CAPACITOR	0.1μF,10V
C7007	NCBA1CK-103W	CAPACITOR	0.01μF,16V
C7008	NCB21EK-333X	CAPACITOR	0.033μF,25V
C7009	NCB11CK-105X	CAPACITOR	1μF,16V
C7010	NCF11CZ-225X	CAPACITOR	2.2μF,16V
C7011	NCBA1HK-332W	CAPACITOR	0.0033μF,50V
C7012	NCBA1HK-221W	CAPACITOR	220pF,50V
C7013	NCBA1CK-103W	CAPACITOR	0.01μF,16V
C7014	NDCA1HJ-680W	CAPACITOR	68pF,50V
C7015	NCF31AZ-105X	CAPACITOR	1μF,10V
C7016	NBE20JM-106X	T CAPACITOR	10μF,6.3V
C7017	NCF21CZ-105X	CAPACITOR	1μF,16V
C7019	NCF31CZ-104X	CAPACITOR	0.1μF,16V
C7021	NCF31CZ-104X	CAPACITOR	0.1μF,16V
C7023	NCF31CZ-104X	CAPACITOR	0.1μF,16V
C7024	NCF31CZ-104X	CAPACITOR	0.1μF,16V
C7025	NCB31EK-103X	CAPACITOR	0.01μF,25V
C7026	NBE41CM-106X	T CAPACITOR	10μF,16V
C7027	NCBA1CK-103W	CAPACITOR	0.01μF,16V
C7028	NBM90JM-106X	T CAPACITOR	10μF,6.3V
C7029	NCFA1AZ-104W	CAPACITOR	0.1μF,10V
C7030	NCFA1AZ-104W	CAPACITOR	0.1μF,10V
C7031	NCBA1CK-103W	CAPACITOR	0.01μF,16V
C7034	NCB11CK-105X	CAPACITOR	1μF,16V
C7035	NCF21CZ-105X	CAPACITOR	1μF,16V
C7036	NCBA1CK-103W	CAPACITOR	0.01μF,16V
C7037	NCB11CK-105X	CAPACITOR	1μF,16V
C7038	NCBA1CK-103W	CAPACITOR	0.01μF,16V
C7039	NBE71CM-336X	T CAPACITOR	33μF,16V
C7040	NCFA1AZ-104W	CAPACITOR	0.1μF,10V
C7041	NCBA1EK-222W	CAPACITOR	0.0022μF,25V
C8001	NBE20JM-106X	T CAPACITOR	10μF,6.3V
C8002	NCFA1AZ-104W	CAPACITOR	0.1μF,10V
C8004	NDCA1HJ-6R0W	CAPACITOR	6pF,50V
C8005	NDCA1HJ-6R0W	CAPACITOR	6pF,50V
C8011	NBE20JM-106X	T CAPACITOR	10μF,6.3V
C8012	NCFA1AZ-104W	CAPACITOR	0.1μF,10V
C8021	NBE20JM-106X	T CAPACITOR	10μF,6.3V
C8022	NCFA1AZ-104W	CAPACITOR	0.1μF,10V
C8024	NDC31HJ-120X	CAPACITOR	12pF,50V
C8025	NDC31HJ-120X	CAPACITOR	12pF,50V
C8026	NCFA1AZ-104W	CAPACITOR	0.1μF,10V
C8031	NBE20JM-106X	T CAPACITOR	10μF,6.3V
C8032	NCFA1AZ-104W	CAPACITOR	0.1μF,10V
C8033	NCF31AZ-105X	CAPACITOR	1μF,10V
C8034	NDC31HJ-271X	CAPACITOR	270pF,50V
C8041	NBE20JM-106X	T CAPACITOR	10μF,6.3V
C8042	NCFA1AZ-104W	CAPACITOR	0.1μF,10V
C8048	NCFA1AZ-104W	CAPACITOR	0.1μF,10V
L1001	NQL044K-100X	COIL	10μH
L1401	NQL045K-100X	COIL	10μH
L1402	NQL044K-100X	COIL	10μH
L1403	NQL035K-100X	COIL	10μH
L1451	NQL184J-390X	COIL	39μH
L2001	NQL045K-100X	COIL	10μH
L2002	NQL045K-100X	COIL	10μH
L2005	NRSA63J-0R0X	MG RESISTOR	0Ω,1/16W
L2021	NQL144K-100X	COIL	10μH
L2022	NQR0265-001X	FERRITE BEAD	
L2351	NQL045K-100X	COIL	10μH

# ⚠ REF No.	PART No.	PART NAME, DESCRIPTION	
L2352	NQL045K-100X	COIL	10μH
L2353	NQR0022-005X	FERRITE BEAD	
L2354	NQR0022-005X	FERRITE BEAD	
L2355	NQR0022-003X	FERRITE BEAD	
L2356	NQL144K-100X	COIL	10μH
L2401	NQL144K-470X	COIL	47μH
L2402	NQL144K-470X	COIL	47μH
L2403	NRSA63J-0R0X	MG RESISTOR	0Ω,1/16W
L2404	NRSA63J-0R0X	MG RESISTOR	0Ω,1/16W
L3001	NQL045K-100X	COIL	10μH
L3002	NQL045K-100X	COIL	10μH
L3101	NQL045K-100X	COIL	10μH
L3102	NQL045K-100X	COIL	10μH
L3201	NQL144K-220X	COIL	22μH
L3202	NQL044K-220X	COIL	22μH
L3203	NQL144K-220X	COIL	22μH
L3204	NQL044K-220X	COIL	22μH
L3205	NQL144K-220X	COIL	22μH
L3601	NQL045K-100X	COIL	10μH
L3651	NQL045K-100X	COIL	10μH
L3652	NQL045K-100X	COIL	10μH
L4201	NQL302N-100X	COIL	10μH
L4202	NQL302N-100X	COIL	10μH
L4203	NQL302N-100X	COIL	10μH
L4204	NQL302N-100X	COIL	10μH
L4301	NQR0265-001X	FERRITE BEAD	
L4302	NQR0265-001X	FERRITE BEAD	
L4303	NQL302N-100X	COIL	10μH
L4304	NQR0265-001X	FERRITE BEAD	
L4305	NQR0265-001X	FERRITE BEAD	
L4401	NQL035K-100X	COIL	10μH
L4402	NQR0129-002X	FERRITE BEAD	
L4403	NQL035K-100X	COIL	10μH
L4404	NQL302N-100X	COIL	10μH
L4405	NQR0129-002X	FERRITE BEAD	
L4406	NQR0129-002X	FERRITE BEAD	
L4407	NQR0129-002X	FERRITE BEAD	
L4701	NQL302N-100X	COIL	10μH
L4801	NQL035K-100X	COIL	10μH
L4802	NQL035K-100X	COIL	10μH
L4803	NQR0129-002X	FERRITE BEAD	
L4851	NQR0129-002X	FERRITE BEAD	
L4853	NQL035K-100X	COIL	10μH
L7002	NQL144K-100X	COIL	10μH
L7003	NQL035K-100X	COIL	10μH
L7004	NQL045K-100X	COIL	10μH
L7005	NQL025J-100X	COIL	10μH
L8001	NRSA02J-0R0X	MG RESISTOR	0Ω,1/10W
L8002	NRSA02J-3R3X	MG RESISTOR	3.3Ω,1/10W
L8003	NQL035K-100X	COIL	10μH
L8004	NQL035K-100X	COIL	10μH
L8005	NQL035K-100X	COIL	10μH
L8006	NQR0267-001X	NOISE FILTER	
L8007	NQR0267-001X	NOISE FILTER	
CF1001	NAX0018-001X	C OSCILLATOR	
LC2021	NQR0008-001X	LC TRAP	
LC2022	NQR0009-001X	LC TRAP	
LC2023	NQR0010-001X	LC TRAP	
X1401	NAX0204-001X	CRYSTAL RESONATOR	
X1451	NAX0005-001X	CRYSTAL RESONATOR	
X2001	NAX0082-001X	CRYSTAL RESONATOR	

# ⚠ REF No.	PART No.	PART NAME, DESCRIPTION	
X2002	NAX0142-001X	CRYSTAL RESONATOR	
X2351	NAX0012-001X	C OSCILLATOR	
X3101	NAX0141-001X	CRYSTAL RESONATOR	
X4401	NAX0201-001X	C OSCILLATOR	
X8001	NAX0206-001X	CRYSTAL RESONATOR	
X8002	NAX0205-001X	C OSCILLATOR	
X8003	NAX0207-001X	CRYSTAL RESONATOR	
TH2021	NAD0002-103X	N THERMISTOR	
TH2022	NAD0002-103X	N THERMISTOR	
TH2023	NAD0002-103X	N THERMISTOR	
J8001	QNZ0118-001	D CONNECTOR	
CN101	QGB0504J1-60X	CONNECTOR	
CN102	QGF0301F1-45X	FPC CONNECTOR	
CN103	QGF0506F1-50X	FPC CONNECTOR	
CN104	QGF0505F1-06X	FPC CONNECTOR	
CN105	QGF0505F2-08X	FPC CONNECTOR	
CN106	QGF0505F2-15X	FPC CONNECTOR	
CN107	QGF0505F2-08X	FPC CONNECTOR	
CN108	QGF0505F1-15X	FPC CONNECTOR	
CN109	QGF0505F2-08X	FPC CONNECTOR	
CN110	QGA1205F1-02X	CONNECTOR	
CN112	QGF0507F1-22X	FPC CONNECTOR	
CN113	QGF0301F1-39X	FPC CONNECTOR	
CN116	QGB0506L1-20X	CONNECTOR	
CN121	QGB0503M1-40X	CONNECTOR	
CN122	QGF0507F1-22X	FPC CONNECTOR	
CN123	QGF0505F2-08X	FPC CONNECTOR	
⚠ F7001	NMFZ005-R125XJ1	FUSE	T0.125A
OT1	LY30016-078A	SPACER-A,L2002	
OT2	LY30016-079A	SPACER-A,IC4302	

– POWER SAVE BOARD ASSEMBLY –

PW	YB20824A	POWER SAVE BOARD ASSY	
IC1	TC7S02FU-X	IC	
IC2	TC4W66FU-X	IC	
IC3	TC74VHC123AFT-X	IC	
	or TC74VHC221AFT-X	IC	
R1	NRSA63J-564X	MG RESISTOR	560kΩ,1/16W
B1	NRSA63J-0R0X	MG RESISTOR	0Ω,1/16W
C1	NCF31CZ-104X	CAPACITOR	0.1μF,16V
C2	NCB31CK-104X	CAPACITOR	0.1μF,16V
C3	NCF31CZ-104X	CAPACITOR	0.1μF,16V
J1	YU40017-040-2	THIN WIRE	
J2	YU40017-015-3	THIN WIRE	
J3	YU40017-060-4	THIN WIRE	
J4	YU40017-025-1	THIN WIRE	
OT1	LY30016-0D5A	SPACER-A	

****

MAIN2 BOARD ASSEMBLY<02>

PW	YB10215B	MAIN2 BOARD ASSY	
IC2101	AK4512-VF-X	IC	
IC2102	NJM2112V	IC	
IC2201	LA7472M	IC	
IC2202	M5282FP-XE	IC	
IC2203	M5282FP-XE	IC	
IC2204	TC74HC4052AFS	IC	
IC2205	BA10324AFV-XE	IC	
IC3701	UPC2385GS	IC	
IC6103	PST9135N	IC	
IC6104	S-80742SN-D6-X	IC	
IC6105	2SJ420	MOS FET	
	or 2SJ419	MOS FET	
IC6110	PST9145N	IC	
Q2	2SD1979/S/-X	TRANSISTOR	
Q2201	2SA1774/QR/-X	TRANSISTOR	
Q2202	2SC4617/QR/-X	TRANSISTOR	
Q2203	2SC4617/QR/-X	TRANSISTOR	
Q2204	2SA1774/QR/-X	TRANSISTOR	
Q2205	2SA1774/QR/-X	TRANSISTOR	
Q2206	UMW1N	PAIR TRANSISTOR	
Q2207	DTC144EE	TRANSISTOR	
Q2208	2SC4617/QR/-X	TRANSISTOR	
Q2209	DTC144EE	TRANSISTOR	
Q2210	DTA143EE	TRANSISTOR	
Q2211	DTC144EE	TRANSISTOR	
Q2212	DTC144EE	TRANSISTOR	
Q2213	2SA1774/QR/-X	TRANSISTOR	
Q2214	DTA144EE	TRANSISTOR	
Q2215	DTC144EE	TRANSISTOR	
Q2216	2SC4617/QR/-X	TRANSISTOR	
Q2217	DTC144EE	TRANSISTOR	
Q2218	DTC144EE	TRANSISTOR	
Q2219	DTA144EE	TRANSISTOR	
Q2220	DTC144EE	TRANSISTOR	
Q2221	2SC4617/QR/-X	TRANSISTOR	
Q2222	2SA1774/QR/-X	TRANSISTOR	
Q2223	2SA1774/QR/-X	TRANSISTOR	
Q2227	DTC144EE	TRANSISTOR	
Q2228	2SC4617/QR/-X	TRANSISTOR	
Q2229	DTC144EE	TRANSISTOR	
Q2231	DTA144EE	TRANSISTOR	
Q2232	DTC144EE	TRANSISTOR	
Q2233	DTC144EE	TRANSISTOR	
Q2245	2SC4617/QR/-X	TRANSISTOR	
Q2246	2SC4617/QR/-X	TRANSISTOR	
Q3701	2SA1774/RS/-X	TRANSISTOR	
Q3702	2SA1774/RS/-X	TRANSISTOR	
Q3703	2SA1577/RS/-X	TRANSISTOR	
Q3704	DTC144EE	TRANSISTOR	
Q3705	DTA144EE	TRANSISTOR	
Q3706	DTC144EE	TRANSISTOR	
Q3707	DTC144EE	TRANSISTOR	
Q6103	2SK1581	FE TRANSISTOR	
Q6105	2SK1580	MOS FET	
Q6106	DTA144EE	TRANSISTOR	
Q6107	2SJ501	MOS FET	
Q6109	2SK1580	MOS FET	
Q6111	DTC144EE	TRANSISTOR	
Q6114	DTC144EE	TRANSISTOR	
Q6115	2SK1580	MOS FET	
Q6116	DTC144EE	TRANSISTOR	
Q6117	2SK1580	MOS FET	
Q6118	2SK1580	MOS FET	
D1	MA8056/H/-X	ZENER DIODE	
D3	MA8056/H/-X	ZENER DIODE	
D4	MA8056/H/-X	ZENER DIODE	

# ⚠ REF No.	PART No.	PART NAME, DESCRIPTION	
D5	DTZ5.6B	ZENER DIODE	
D2201	DAN222	DIODE	
D2202	DA221	DIODE	
D2203	DA221	DIODE	
D2204	DAN222	DIODE	
D2205	DAN222	DIODE	
D2206	DAP222	DIODE	
D2207	DAN222	DIODE	
D3701	DAP222	DIODE	
D3702	DTZ6.8	ZENER DIODE	
D3703	DTZ6.8	ZENER DIODE	
D3704	DTZ6.8	ZENER DIODE	
D6103	DAN222	DIODE	
D6104	DAN222	DIODE	
D6106	F1J2F	SB DIODE	
D6107	F1J2F	SB DIODE	
D6108	F1J2F	SB DIODE	
R8	NRSA6AJ-0R0W	MG RESISTOR	0Ω,1/16W
R9	NQR0251-004X	FERRITE BEAD	
R10	NQR0251-004X	FERRITE BEAD	
R11	NQR0251-004X	FERRITE BEAD	
R12	NRSA6AJ-0R0W	MG RESISTOR	0Ω,1/16W
R13	NRSA6AJ-0R0W	MG RESISTOR	0Ω,1/16W
R17	NRSA6AJ-183W	MG RESISTOR	18kΩ,1/16W
R18	NRSA63J-0R0X	MG RESISTOR	0Ω,1/16W
R19	NRSA63J-0R0X	MG RESISTOR	0Ω,1/16W
R20	NRSA02J-0R0X	MG RESISTOR	0Ω,1/10W
R2101	NRSA6AJ-820W	MG RESISTOR	82Ω,1/16W
R2102	NRSA6AJ-820W	MG RESISTOR	82Ω,1/16W
R2103	NRSA6AJ-820W	MG RESISTOR	82Ω,1/16W
R2104	NRSA6AJ-103W	MG RESISTOR	10kΩ,1/16W
R2105	NRSA6AJ-103W	MG RESISTOR	10kΩ,1/16W
R2106	NRSA6AJ-103W	MG RESISTOR	10kΩ,1/16W
R2107	NRSA6AJ-103W	MG RESISTOR	10kΩ,1/16W
R2108	NRSA6AJ-103W	MG RESISTOR	10kΩ,1/16W
R2109	NRSA6AJ-103W	MG RESISTOR	10kΩ,1/16W
R2110	NRSA6AJ-103W	MG RESISTOR	10kΩ,1/16W
R2111	NRSA6AJ-103W	MG RESISTOR	10kΩ,1/16W
R2112	NRSA6AJ-472W	MG RESISTOR	4.7kΩ,1/16W
R2113	NRSA6AJ-472W	MG RESISTOR	4.7kΩ,1/16W
R2114	NRSA6AJ-472W	MG RESISTOR	4.7kΩ,1/16W
R2115	NRSA6AJ-472W	MG RESISTOR	4.7kΩ,1/16W
R2116	NRSA6AJ-472W	MG RESISTOR	4.7kΩ,1/16W
R2117	NRSA6AJ-472W	MG RESISTOR	4.7kΩ,1/16W
R2118	NRSA6AJ-472W	MG RESISTOR	4.7kΩ,1/16W
R2119	NRSA6AJ-472W	MG RESISTOR	4.7kΩ,1/16W
R2120	NRSA6AJ-471W	MG RESISTOR	470Ω,1/16W
R2121	NRSA6AJ-471W	MG RESISTOR	470Ω,1/16W
R2122	NRSA6AJ-564W	MG RESISTOR	560kΩ,1/16W
R2123	NRSA6AJ-564W	MG RESISTOR	560kΩ,1/16W
R2124	NRSA6AJ-100W	MG RESISTOR	10Ω,1/16W
R2201	NRVA6AD-122W	CMF RESISTOR	1.2kΩ,1/16W
R2202	NRVA6AD-122W	CMF RESISTOR	1.2kΩ,1/16W
R2203	NRSA6AJ-103W	MG RESISTOR	10kΩ,1/16W
R2204	NRSA6AJ-103W	MG RESISTOR	10kΩ,1/16W
R2205	NRSA6AJ-103W	MG RESISTOR	10kΩ,1/16W
R2206	NRSA6AJ-183W	MG RESISTOR	18kΩ,1/16W
R2207	NRSA6AJ-183W	MG RESISTOR	18kΩ,1/16W
R2208	NRSA6AJ-333W	MG RESISTOR	33kΩ,1/16W
R2209	NRSA6AJ-333W	MG RESISTOR	33kΩ,1/16W
R2210	NRSA6AJ-103W	MG RESISTOR	10kΩ,1/16W

# ⚠ REF No.	PART No.	PART NAME, DESCRIPTION	
R2211	NRSA6AJ-103W	MG RESISTOR	10kΩ,1/16W
R2212	NRSA6AJ-332W	MG RESISTOR	3.3kΩ,1/16W
R2213	NRSA6AJ-332W	MG RESISTOR	3.3kΩ,1/16W
R2214	NRSA6AJ-392W	MG RESISTOR	3.9kΩ,1/16W
R2215	NRSA6AJ-392W	MG RESISTOR	3.9kΩ,1/16W
R2216	NRSA6AJ-0R0W	MG RESISTOR	0Ω,1/16W
R2217	NRSA6AJ-0R0W	MG RESISTOR	0Ω,1/16W
R2218	NRSA6AJ-333W	MG RESISTOR	33kΩ,1/16W
R2219	NRSA6AJ-333W	MG RESISTOR	33kΩ,1/16W
R2220	NRSA6AJ-181W	MG RESISTOR	180Ω,1/16W
R2221	NRSA6AJ-181W	MG RESISTOR	180Ω,1/16W
R2222	NRSA6AJ-562W	MG RESISTOR	5.6kΩ,1/16W
R2223	NRSA6AJ-562W	MG RESISTOR	5.6kΩ,1/16W
R2224	NRSA6AJ-105W	MG RESISTOR	1MΩ,1/16W
R2225	NRSA6AJ-105W	MG RESISTOR	1MΩ,1/16W
R2226	NRSA6AJ-563W	MG RESISTOR	56kΩ,1/16W
R2227	NRSA6AJ-563W	MG RESISTOR	56kΩ,1/16W
R2228	NRSA6AJ-333W	MG RESISTOR	33kΩ,1/16W
R2229	NRSA6AJ-333W	MG RESISTOR	33kΩ,1/16W
R2230	NRSA6AJ-102W	MG RESISTOR	1kΩ,1/16W
R2231	NRSA6AJ-333W	MG RESISTOR	33kΩ,1/16W
R2232	NRSA6AJ-154W	MG RESISTOR	150kΩ,1/16W
R2233	NRSA6AJ-154W	MG RESISTOR	150kΩ,1/16W
R2234	NRSA6AJ-154W	MG RESISTOR	150kΩ,1/16W
R2235	NRSA6AJ-224W	MG RESISTOR	220kΩ,1/16W
R2236	NRSA6AJ-103W	MG RESISTOR	10kΩ,1/16W
R2237	NRSA6AJ-105W	MG RESISTOR	1MΩ,1/16W
R2238	NRSA63J-820X	MG RESISTOR	82Ω,1/16W
R2239	NRSA6AJ-104W	MG RESISTOR	100kΩ,1/16W
R2240	NRSA6AJ-820W	MG RESISTOR	82Ω,1/16W
R2241	NRSA63J-820X	MG RESISTOR	82Ω,1/16W
R2242	NRSA6AJ-820W	MG RESISTOR	82Ω,1/16W
R2243	NRSA63J-820X	MG RESISTOR	82Ω,1/16W
R2244	NRSA6AJ-103W	MG RESISTOR	10kΩ,1/16W
R2245	NRSA6AJ-222W	MG RESISTOR	2.2kΩ,1/16W
R2246	NRSA6AJ-153W	MG RESISTOR	15kΩ,1/16W
R2247	NRSA6AJ-153W	MG RESISTOR	15kΩ,1/16W
R2248	NRSA6AJ-103W	MG RESISTOR	10kΩ,1/16W
R2249	NRSA6AJ-103W	MG RESISTOR	10kΩ,1/16W
R2250	NRSA6AJ-474W	MG RESISTOR	470kΩ,1/16W
R2251	NRSA6AJ-474W	MG RESISTOR	470kΩ,1/16W
R2252	NRSA6AJ-473W	MG RESISTOR	47kΩ,1/16W
R2253	NRSA6AJ-473W	MG RESISTOR	47kΩ,1/16W
R2254	NRSA6AJ-682W	MG RESISTOR	6.8kΩ,1/16W
R2255	NRSA6AJ-682W	MG RESISTOR	6.8kΩ,1/16W
R2256	NRSA6AJ-682W	MG RESISTOR	6.8kΩ,1/16W
R2257	NRSA6AJ-682W	MG RESISTOR	6.8kΩ,1/16W
R2266	NRSA6AJ-564W	MG RESISTOR	560kΩ,1/16W
R2267	NRSA6AJ-564W	MG RESISTOR	560kΩ,1/16W
R2268	NRSA6AJ-821W	MG RESISTOR	820Ω,1/16W
R2269	NRSA6AJ-821W	MG RESISTOR	820Ω,1/16W
R2270	NRSA6AJ-104W	MG RESISTOR	100kΩ,1/16W
R2271	NRSA6AJ-104W	MG RESISTOR	100kΩ,1/16W
R2272	NRSA6AJ-332W	MG RESISTOR	3.3kΩ,1/16W
R2273	NRSA6AJ-153W	MG RESISTOR	15kΩ,1/16W
R2274	NRSA6AJ-153W	MG RESISTOR	15kΩ,1/16W
R2275	NRSA6AJ-102W	MG RESISTOR	1kΩ,1/16W
R2276	NRVA6AD-683W	CMF RESISTOR	68kΩ,1/16W
R2277	NRSA6AJ-103W	MG RESISTOR	10kΩ,1/16W
R2278	NRSA6AJ-105W	MG RESISTOR	1MΩ,1/16W
R2279	NRVA6AD-153W	CMF RESISTOR	15kΩ,1/16W

# ⚠ REF No.	PART No.	PART NAME, DESCRIPTION	
R2280	NRVA6AD-393W	CMF RESISTOR	39kΩ,1/16W
R2283	NRSA6AJ-104W	MG RESISTOR	100kΩ,1/16W
R2285	NRSA6AJ-103W	MG RESISTOR	10kΩ,1/16W
R2286	NRSA6AJ-273W	MG RESISTOR	27kΩ,1/16W
R2287	NRSA6AJ-153W	MG RESISTOR	15kΩ,1/16W
R2288	NRSA6AJ-394W	MG RESISTOR	390kΩ,1/16W
R2289	NRSA6AJ-104W	MG RESISTOR	100kΩ,1/16W
R2290	NRSA6AJ-103W	MG RESISTOR	10kΩ,1/16W
R2291	NRSA6AJ-224W	MG RESISTOR	220kΩ,1/16W
R2292	NRSA6AJ-155W	MG RESISTOR	1.5MΩ,1/16W
R2293	NRSA6AJ-102W	MG RESISTOR	1kΩ,1/16W
R2294	NRSA6AJ-102W	MG RESISTOR	1kΩ,1/16W
R2295	NRSA6AJ-103W	MG RESISTOR	10kΩ,1/16W
R2296	NRSA6AJ-333W	MG RESISTOR	33kΩ,1/16W
R2299	NRSA6AJ-820W	MG RESISTOR	82Ω,1/16W
R2300	NRSA6AJ-820W	MG RESISTOR	82Ω,1/16W
R2301	NRSA6AJ-820W	MG RESISTOR	82Ω,1/16W
R2302	NRSA6AJ-820W	MG RESISTOR	82Ω,1/16W
R2303	NRSA6AJ-820W	MG RESISTOR	82Ω,1/16W
R2304	NRSA6AJ-820W	MG RESISTOR	82Ω,1/16W
R2305	NRSA6AJ-820W	MG RESISTOR	82Ω,1/16W
R2306	NRSA6AJ-820W	MG RESISTOR	82Ω,1/16W
R2307	NRSA6AJ-820W	MG RESISTOR	82Ω,1/16W
R2337	NRSA6AJ-182W	MG RESISTOR	1.8kΩ,1/16W
R2338	NRSA6AJ-222W	MG RESISTOR	2.2kΩ,1/16W
R2339	NRSA6AJ-564W	MG RESISTOR	560kΩ,1/16W
R2340	NRSA6AJ-152W	MG RESISTOR	1.5kΩ,1/16W
R2341	NRSA6AJ-104W	MG RESISTOR	100kΩ,1/16W
R2343	NRSA6AJ-0R0W	MG RESISTOR	0Ω,1/16W
R2344	NRSA6AJ-0R0W	MG RESISTOR	0Ω,1/16W
R2352	NRSA6AJ-104W	MG RESISTOR	100kΩ,1/16W
R2353	NRSA6AJ-104W	MG RESISTOR	100kΩ,1/16W
R2354	NRSA6AJ-102W	MG RESISTOR	1kΩ,1/16W
R2355	NRSA6AJ-104W	MG RESISTOR	100kΩ,1/16W
R2356	NRSA6AJ-104W	MG RESISTOR	100kΩ,1/16W
R2357	NRSA6AJ-102W	MG RESISTOR	1kΩ,1/16W
R2358	NRSA6AJ-0R0W	MG RESISTOR	0Ω,1/16W
R2359	NRSA6AJ-0R0W	MG RESISTOR	0Ω,1/16W
R2360	NRSA6AJ-103W	MG RESISTOR	10kΩ,1/16W
R2361	NRSA6AJ-0R0W	MG RESISTOR	0Ω,1/16W
R2363	NRSA6AJ-564W	MG RESISTOR	560kΩ,1/16W
R2365	NRSA6AJ-332W	MG RESISTOR	3.3kΩ,1/16W
R2366	NRSA6AJ-102W	MG RESISTOR	1kΩ,1/16W
R2367	NRSA6AJ-0R0W	MG RESISTOR	0Ω,1/16W
R3701	NRSA6AJ-0R0W	MG RESISTOR	0Ω,1/16W
R3703	NRSA6AJ-102W	MG RESISTOR	1kΩ,1/16W
R3704	NRSA6AJ-102W	MG RESISTOR	1kΩ,1/16W
R3705	NRSA6AJ-222W	MG RESISTOR	2.2kΩ,1/16W
R3706	NRSA6AJ-102W	MG RESISTOR	1kΩ,1/16W
R3708	NRSA6AJ-102W	MG RESISTOR	1kΩ,1/16W
R3709	NRSA6AJ-222W	MG RESISTOR	2.2kΩ,1/16W
R3710	NRSA6AJ-0R0W	MG RESISTOR	0Ω,1/16W
R3711	NRSA6AJ-0R0W	MG RESISTOR	0Ω,1/16W
R3712	NRSA6AJ-103W	MG RESISTOR	10kΩ,1/16W
R3713	NRSA6AJ-473W	MG RESISTOR	47kΩ,1/16W
R3714	NRSA6AJ-331W	MG RESISTOR	330Ω,1/16W
R3715	NRSA6AJ-473W	MG RESISTOR	47kΩ,1/16W
R3716	NRSA6AJ-331W	MG RESISTOR	330Ω,1/16W
R3717	NRSA6AJ-223W	MG RESISTOR	22kΩ,1/16W
R3719	NRSA6AJ-331W	MG RESISTOR	330Ω,1/16W
R3720	NRSA6AJ-331W	MG RESISTOR	330Ω,1/16W

# ⚠ REF No.	PART No.	PART NAME, DESCRIPTION	
R3721	NRSA6AJ-102W	MG RESISTOR	1kΩ,1/16W
R3722	NRSA6AJ-103W	MG RESISTOR	10kΩ,1/16W
R3723	NRSA6AJ-822W	MG RESISTOR	8.2kΩ,1/16W
R3724	NRSA6AJ-473W	MG RESISTOR	47kΩ,1/16W
R3725	NRSA6AJ-222W	MG RESISTOR	2.2kΩ,1/16W
R3726	NRSA02J-680X	MG RESISTOR	68Ω,1/10W
R3727	NRSA02J-680X	MG RESISTOR	68Ω,1/10W
R3728	NRSA02J-680X	MG RESISTOR	68Ω,1/10W
R3730	NRSA63J-0R0X	MG RESISTOR	0Ω,1/16W
R3731	NRSA63J-0R0X	MG RESISTOR	0Ω,1/16W
R6025	NRSA6AJ-224W	MG RESISTOR	220kΩ,1/16W
R6102	NRSA6AJ-103W	MG RESISTOR	10kΩ,1/16W
R6105	NRSA6AJ-102W	MG RESISTOR	1kΩ,1/16W
R6109	NRSA6AJ-473W	MG RESISTOR	47kΩ,1/16W
R6110	NRSA6AJ-105W	MG RESISTOR	1MΩ,1/16W
R6111	NRSA6AJ-104W	MG RESISTOR	100kΩ,1/16W
R6112	NRSA6AJ-104W	MG RESISTOR	100kΩ,1/16W
R6114	NRSA6AJ-472W	MG RESISTOR	4.7kΩ,1/16W
R6117	NRVA63D-183X	CMF RESISTOR	18kΩ,1/16W
R6118	NRVA63D-104X	CMF RESISTOR	100kΩ,1/16W
R6119	NRSA6AJ-104W	MG RESISTOR	100kΩ,1/16W
R6120	NRSA6AJ-223W	MG RESISTOR	22kΩ,1/16W
B2201	NRSA6AJ-0R0W	MG RESISTOR	0Ω,1/16W
B2202	NRSA6AJ-0R0W	MG RESISTOR	0Ω,1/16W
B2204	NRSA63J-0R0X	MG RESISTOR	0Ω,1/16W
B6101	NRSA02J-0R0X	MG RESISTOR	0Ω,1/10W
B6113	NRSA6AJ-472W	MG RESISTOR	4.7kΩ,1/16W
B6116	NRSA63J-0R0X	MG RESISTOR	0Ω,1/16W
C1	NCBA1HK-122W	CAPACITOR	0.0012μF,50V
C2	NFV41HJ-102X	MPPS CAPACITOR	0.001μF,50V
C3	NFV41HJ-272X	MPPS CAPACITOR	0.0027μF,50V
C5	NCBA1EK-472W	CAPACITOR	0.0047μF,25V
C6	NCBA1HK-122W	CAPACITOR	0.0012μF,50V
C2101	NBE40JM-476X	T CAPACITOR	47μF,6.3V
C2102	NBE20JM-106X	T CAPACITOR	10μF,6.3V
C2103	NBE20JM-106X	T CAPACITOR	10μF,6.3V
C2104	NCB31CK-104X	CAPACITOR	0.1μF,16V
C2105	NCB31CK-104X	CAPACITOR	0.1μF,16V
C2106	NBE20JM-106X	T CAPACITOR	10μF,6.3V
C2107	NBE20JM-106X	T CAPACITOR	10μF,6.3V
C2108	NCB31HK-152X	CAPACITOR	0.0015μF,50V
C2109	NCB31HK-152X	CAPACITOR	0.0015μF,50V
C2110	NDC31HK-221X	CAPACITOR	220pF,50V
C2111	NDC31HK-221X	CAPACITOR	220pF,50V
C2114	NBE20JM-106X	T CAPACITOR	10μF,6.3V
C2115	NCB31CK-104X	CAPACITOR	0.1μF,16V
C2116	NBE20JM-475X	T CAPACITOR	4.7μF,6.3V
C2117	NCB31CK-104X	CAPACITOR	0.1μF,16V
C2118	NBE20JM-475X	T CAPACITOR	4.7μF,6.3V
C2119	NCB31CK-104X	CAPACITOR	0.1μF,16V
C2120	NBE20JM-475X	T CAPACITOR	4.7μF,6.3V
C2121	NCB31CK-104X	CAPACITOR	0.1μF,16V
C2122	NBE20JM-106X	T CAPACITOR	10μF,6.3V
C2123	NCB31CK-104X	CAPACITOR	0.1μF,16V
C2124	NCB31HK-222X	CAPACITOR	0.0022μF,50V
C2125	NCB31HK-222X	CAPACITOR	0.0022μF,50V
C2126	NCB31CK-104X	CAPACITOR	0.1μF,16V
C2127	NCB21AK-105X	CAPACITOR	1μF,10V
C2128	NCB21AK-105X	CAPACITOR	1μF,10V
C2203	NCBA1HK-102W	CAPACITOR	0.001μF,50V
C2204	NCBA1HK-102W	CAPACITOR	0.001μF,50V

# ⚠ REF No.	PART No.	PART NAME, DESCRIPTION	
C2205	NCB31CK-104X	CAPACITOR	0.1μF,16V
C2206	NCB31CK-104X	CAPACITOR	0.1μF,16V
C2208	NBE40JM-226X	T CAPACITOR	22μF,6.3V
C2209	NCB31EK-223X	CAPACITOR	0.022μF,25V
C2210	NCB31EK-223X	CAPACITOR	0.022μF,25V
C2211	NRSA63J-0R0X	MG RESISTOR	0Ω,1/16W
C2212	NRSA63J-0R0X	MG RESISTOR	0Ω,1/16W
C2213	NCB31HK-682X	CAPACITOR	0.0068μF,50V
C2214	NCB31HK-682X	CAPACITOR	0.0068μF,50V
C2215	NCBA1HK-182W	CAPACITOR	0.0018μF,50V
C2216	NCBA1HK-182W	CAPACITOR	0.0018μF,50V
C2219	NCB31CK-104X	CAPACITOR	0.1μF,16V
C2220	NCB31CK-104X	CAPACITOR	0.1μF,16V
C2221	NCBA1HK-332W	CAPACITOR	0.0033μF,50V
C2222	NCBA1HK-332W	CAPACITOR	0.0033μF,50V
C2223	NCB21CK-154X	CAPACITOR	0.15μF,16V
C2224	NCB21CK-154X	CAPACITOR	0.15μF,16V
C2227	NCB21AK-105X	CAPACITOR	1μF,10V
C2228	NCB21AK-105X	CAPACITOR	1μF,10V
C2229	NCB21AK-105X	CAPACITOR	1μF,10V
C2230	NCB21AK-105X	CAPACITOR	1μF,10V
C2231	NBE20JM-106X	T CAPACITOR	10μF,6.3V
C2232	NBE20JM-106X	T CAPACITOR	10μF,6.3V
C2233	NBE20JM-106X	T CAPACITOR	10μF,6.3V
C2234	NBE40JM-476X	T CAPACITOR	47μF,6.3V
C2235	NCBA1CK-103W	CAPACITOR	0.01μF,16V
C2236	NCBA1CK-103W	CAPACITOR	0.01μF,16V
C2237	NCB31EK-223X	CAPACITOR	0.022μF,25V
C2238	NCBA1CK-103W	CAPACITOR	0.01μF,16V
C2239	NBE40JM-476X	T CAPACITOR	47μF,6.3V
C2240	NBE40JM-476X	T CAPACITOR	47μF,6.3V
C2241	NCF21CZ-105X	CAPACITOR	1μF,16V
C2242	NCF21CZ-105X	CAPACITOR	1μF,16V
C2243	NCB21EK-333X	CAPACITOR	0.033μF,25V
C2244	NCB21EK-333X	CAPACITOR	0.033μF,25V
C2245	NBE20JM-106X	T CAPACITOR	10μF,6.3V
C2246	NBE20JM-106X	T CAPACITOR	10μF,6.3V
C2247	NCB21AK-105X	CAPACITOR	1μF,10V
C2248	NCB21AK-105X	CAPACITOR	1μF,10V
C2249	NCB21AK-105X	CAPACITOR	1μF,10V
C2250	NCB21AK-105X	CAPACITOR	1μF,10V
C2251	NCB21AK-105X	CAPACITOR	1μF,10V
C2252	NCB21AK-105X	CAPACITOR	1μF,10V
C2253	NCB21AK-105X	CAPACITOR	1μF,10V
C2254	NBE40JM-476X	T CAPACITOR	47μF,6.3V
C2260	NBE41AM-106X	T CAPACITOR	10μF,10V
C2261	PECA1172	E CAPACITOR	
C2264	NBE40JM-476X	T CAPACITOR	47μF,6.3V
C2265	NCBA1EK-472W	CAPACITOR	0.0047μF,25V
C2266	NCBA1EK-472W	CAPACITOR	0.0047μF,25V
C2268	NCF21CZ-474X	CAPACITOR	0.47μF,16V
C2269	NDCA1HJ-470W	CAPACITOR	47pF,50V
C2270	NCB21AK-105X	CAPACITOR	1μF,10V
C2271	NCB21EK-104X	CAPACITOR	0.1μF,25V
C2272	NBE80JM-106X	T CAPACITOR	10μF,6.3V
C2273	NBE80JM-106X	T CAPACITOR	10μF,6.3V
C2274	NCB21EK-104X	CAPACITOR	0.1μF,25V
C2275	NCB21AK-105X	CAPACITOR	1μF,10V
C2276	NCB21AK-105X	CAPACITOR	1μF,10V
C2277	NCB21EK-104X	CAPACITOR	0.1μF,25V
C2278	NCBA1HK-122W	CAPACITOR	0.0012μF,50V

# ⚠ REF No.	PART No.	PART NAME, DESCRIPTION	
C2279	NCBA1HK-122W	CAPACITOR	0.0012μF,50V
C2280	NCFA1AZ-104W	CAPACITOR	0.1μF,10V
C2281	NCFA1AZ-104W	CAPACITOR	0.1μF,10V
C2282	NCFA1AZ-104W	CAPACITOR	0.1μF,10V
C2283	NCFA1AZ-104W	CAPACITOR	0.1μF,10V
C2286	NCB21AK-105X	CAPACITOR	1μF,10V
C2287	NCB21AK-105X	CAPACITOR	1μF,10V
C2291	NCB31HK-102X	CAPACITOR	0.001μF,50V
C2292	NCB31HK-222X	CAPACITOR	0.0022μF,50V
C2294	NCB31EK-103X	CAPACITOR	0.01μF,25V
C2295	NCB31EK-103X	CAPACITOR	0.01μF,25V
C2296	NCB21AK-105X	CAPACITOR	1μF,10V
C2299	NCBA1HK-102W	CAPACITOR	0.001μF,50V
C2300	NBE20JM-106X	T CAPACITOR	10μF,6.3V
C2302	NCB21AK-105X	CAPACITOR	1μF,10V
C2303	NBE40JM-476X	T CAPACITOR	47μF,6.3V
C3701	NBE40JM-476X	T CAPACITOR	47μF,6.3V
C3703	NDCA1HJ-6R0W	CAPACITOR	6pF,50V
C3704	NDCA1HJ-220W	CAPACITOR	22pF,50V
C3705	NCBA1CK-103W	CAPACITOR	0.01μF,16V
C3707	NCBA1CK-103W	CAPACITOR	0.01μF,16V
C3708	NBE20GM-226X	T CAPACITOR	22μF,4.0V
C3709	NBE20GM-226X	T CAPACITOR	22μF,4.0V
C3710	NCB21CK-474X	CAPACITOR	0.47μF,16V
C3711	NCBA1CK-103W	CAPACITOR	0.01μF,16V
C3712	NDCA1HJ-820W	CAPACITOR	82pF,50V
C3715	NCBA1CK-103W	CAPACITOR	0.01μF,16V
C3716	NCBA1CK-103W	CAPACITOR	0.01μF,16V
C3717	NCBA1CK-103W	CAPACITOR	0.01μF,16V
C3718	NCBA1CK-103W	CAPACITOR	0.01μF,16V
C3719	NCBA1CK-103W	CAPACITOR	0.01μF,16V
C3720	NBE40JM-476X	T CAPACITOR	47μF,6.3V
C3721	NCBA1CK-103W	CAPACITOR	0.01μF,16V
C3722	NBE40JM-226X	T CAPACITOR	22μF,6.3V
C3723	NCFA1AZ-104W	CAPACITOR	0.1μF,10V
C3725	NBE60GM-337X	T CAPACITOR	330μF,4.0V
C3726	NBE60GM-337X	T CAPACITOR	330μF,4.0V
C6103	NBE41CM-106X	T CAPACITOR	10μF,16V
C6104	NCB31EK-103X	CAPACITOR	0.01μF,25V
C6108	NBE41CM-106X	T CAPACITOR	10μF,16V
C6109	NCB31CK-104X	CAPACITOR	0.1μF,16V
C6111	NBE51AM-686X	T CAPACITOR	68μF,10V
C6112	NBE51AM-686X	T CAPACITOR	68μF,10V
C6118	NCB31CK-104X	CAPACITOR	0.1μF,16V
C6121	NBE20JM-106X	T CAPACITOR	10μF,6.3V
C6122	NCB31CK-104X	CAPACITOR	0.1μF,16V
C6124	NCF31CZ-104X	CAPACITOR	0.1μF,16V
C6125	NBE41CM-106X	T CAPACITOR	10μF,16V
C6129	QETL1CM-227	E CAPACITOR	220μF,16V
C6131	NCF21CZ-105X	CAPACITOR	1μF,16V
C6132	NCF21CZ-105X	CAPACITOR	1μF,16V
L2101	NQL144K-100X	COIL	10μH
L2201	NRSA63J-0R0X	MG RESISTOR	0Ω,1/16W
L2202	NRSA63J-0R0X	MG RESISTOR	0Ω,1/16W
L2203	NRSA63J-0R0X	MG RESISTOR	0Ω,1/16W
L2204	NRSA63J-0R0X	MG RESISTOR	0Ω,1/16W
L2205	NRSA63J-0R0X	MG RESISTOR	0Ω,1/16W
L2206	NRSA63J-0R0X	MG RESISTOR	0Ω,1/16W
L2210	NRSA63J-0R0X	MG RESISTOR	0Ω,1/16W
L3701	NQL044K-220X	COIL	22μH
L3702	NQL044K-220X	COIL	22μH

# ⚠ REF No.	PART No.	PART NAME, DESCRIPTION	
L3703	NQL044K-220X	COIL	22μH
L6125	NQL044K-470X	COIL	47μH
L6126	NQL144K-100X	COIL	10μH
L6128	NQL044K-100X	COIL	10μH
FL3701	NQR0012-001X	LOW PASS FILTER	
RY6101	NSK0002-003X	RELAY	
JP1	QUB220-09A1A1	SIN TWIST WIRE	
JP2	QUB220-09A1A1	SIN TWIST WIRE	
J1	QNS0072-001	3.5 JACK	
J2	QNS0078-001	3.5 JACK	
J3	QND0004-001	S JACK	
J4	QNA0001-001	DC JACK	
TB1	LY30534-001C	BATTTERY TERMINAL UNIT	
CN201	QGF0301F1-45X	FPC CONNECTOR	
CN202	QGF0506F1-50X	FPC CONNECTOR	
CN204	PEMC1125-003-P	CONNECTOR	
CN205	QGB0505M1-50X	CONNECTOR	
CN207	QGF0503C1-28X	FPC CONNECTOR	
OT1	LY30016-0B1A	SPACER-A,BATT.TERM.UNIT TOP	
OT2	LY30016-0B2A	SPACER-A,BATT.TERM.UNIT LOWER	
OT3	LY30016-0B3A	SPACER-A,BATT.TERM.UNIT UPPER	
OT4	LY30016-089A	SPACER-A,R2107,C2101	
SD1	LY40775-001A	SHIELD PLATE	

****

DC/DC BOARD ASSEMBLY <03>

PW	YB10217A-03	DC/DC BOARD ASSY	
IC6001	BA9736KV	IC	
Q6001	2SB1302/ST/-X	TRANSISTOR	
Q6002	2SB1302/ST/-X	TRANSISTOR	
Q6003	2SB1302/ST/-X	TRANSISTOR	
Q6004	2SK2316	MOS FET	
Q6005	2SB1121/TU/-X	TRANSISTOR	
Q6006	2SB1302/ST/-X	TRANSISTOR	
Q6007	2SD2402/YZ/-X	TRANSISTOR	
Q6008	2SB1302/ST/-X	TRANSISTOR	
Q6009	2SC4617/QR/-X	TRANSISTOR	
Q6010	2SB1302/ST/-X	TRANSISTOR	
Q6011	2SK2316	MOS FET	
Q6012	DTA144EE	TRANSISTOR	
	or RN2104	TRANSISTOR	
	or UN9113J	TRANSISTOR	
Q6013	DTC144EE	TRANSISTOR	
	or RN1104	TRANSISTOR	
	or UN9213J	TRANSISTOR	
Q6014	DTC144EE	TRANSISTOR	
	or RN1104	TRANSISTOR	
	or UN9213J	TRANSISTOR	
Q6015	2SC4081/S/-X	TRANSISTOR	
D6001	SFPB-72-W	SB DIODE	
D6002	DWA010	SB DIODE	
D6003	F1J2F	SB DIODE	
D6004	SFPB-72-W	SB DIODE	
D6005	F1J2F	SB DIODE	
D6006	F1J2F	SB DIODE	
D6007	F1J2F	SB DIODE	
D6008	SB05-05CP-X	DIODE	

# ⚠ REF No.	PART No.	PART NAME, DESCRIPTION	
R6001	NRSA6AJ-103W	MG RESISTOR	10kΩ,1/16W
R6002	NRSA6AJ-103W	MG RESISTOR	10kΩ,1/16W
R6003	NRSA6AJ-0R0W	MG RESISTOR	0Ω,1/16W
R6005	NRVA6AD-302W	CMF RESISTOR	3kΩ,1/16W
R6006	NRVA6AD-243W	CMF RESISTOR	24kΩ,1/16W
R6007	NRVA6AD-682W	CMF RESISTOR	6.8kΩ,1/16W
R6008	NRVA6AD-223W	CMF RESISTOR	22kΩ,1/16W
R6009	NRVA6AD-242W	CMF RESISTOR	2.4kΩ,1/16W
R6010	NRVA6AD-392W	CMF RESISTOR	3.9kΩ,1/16W
R6011	NRVA6AD-682W	CMF RESISTOR	6.8kΩ,1/16W
R6012	NRVA6AD-432W	CMF RESISTOR	4.3kΩ,1/16W
R6013	NRVA6AD-222W	CMF RESISTOR	2.2kΩ,1/16W
R6014	NRVA6AD-222W	CMF RESISTOR	2.2kΩ,1/16W
R6015	NRVA6AD-432W	CMF RESISTOR	4.3kΩ,1/16W
R6016	NRVA6AD-242W	CMF RESISTOR	2.4kΩ,1/16W
R6017	NRVA6AD-302W	CMF RESISTOR	3kΩ,1/16W
R6018	NRSA6AJ-123W	MG RESISTOR	12kΩ,1/16W
R6019	NRVA6AD-243W	CMF RESISTOR	24kΩ,1/16W
R6020	NRVA6AD-822W	CMF RESISTOR	8.2kΩ,1/16W
R6021	NRSA6AJ-473W	MG RESISTOR	47kΩ,1/16W
R6022	NRVA6AD-912W	CMF RESISTOR	9.1kΩ,1/16W
R6023	NRVA6AD-753W	CMF RESISTOR	75kΩ,1/16W
R6024	NRVA6AD-133W	CMF RESISTOR	13kΩ,1/16W
R6025	NRVA6AD-333W	CMF RESISTOR	33kΩ,1/16W
R6026	NRVA6AD-113W	CMF RESISTOR	11kΩ,1/16W
R6027	NRVA6AD-512W	CMF RESISTOR	5.1kΩ,1/16W
R6028	NRVA6AD-272W	CMF RESISTOR	2.7kΩ,1/16W
R6029	NRVA6AD-272W	CMF RESISTOR	2.7kΩ,1/16W
R6030	NRSA6AJ-472W	MG RESISTOR	4.7kΩ,1/16W
R6031	NRSA6AJ-682W	MG RESISTOR	6.8kΩ,1/16W
R6032	NRSA6AJ-472W	MG RESISTOR	4.7kΩ,1/16W
R6033	NRSA6AJ-472W	MG RESISTOR	4.7kΩ,1/16W
R6034	NRVA6AD-823W	CMF RESISTOR	82kΩ,1/16W
R6035	NRVA6AD-822W	CMF RESISTOR	8.2kΩ,1/16W
R6036	NRVA6AD-302W	CMF RESISTOR	3kΩ,1/16W
R6037	NRSA6AJ-181W	MG RESISTOR	180Ω,1/16W
R6039	NRSA6AJ-0R0W	MG RESISTOR	0Ω,1/16W
R6040	NRVA6AD-202W	CMF RESISTOR	2kΩ,1/16W
R6042	NRVA6AD-153W	CMF RESISTOR	15kΩ,1/16W
R6050	NRSA63J-0R0X	MG RESISTOR	0Ω,1/16W
R6052	NRSA6AJ-391W	MG RESISTOR	390Ω,1/16W
C6001	NCBA1HK-102W	CAPACITOR	0.001μF,50V
C6002	NCBA1HK-102W	CAPACITOR	0.001μF,50V
C6003	NCBA1HK-102W	CAPACITOR	0.001μF,50V
C6004	NCBA1HK-102W	CAPACITOR	0.001μF,50V
C6005	NCB21CK-224X	CAPACITOR	0.22μF,16V
C6006	NCB31CK-104X	CAPACITOR	0.1μF,16V
C6007	NCB11AK-225X-A	CAPACITOR	2.2μF,10V
C6008	NCB31CK-104X	CAPACITOR	0.1μF,16V
C6009	NCB31EK-103X	CAPACITOR	0.01μF,25V
C6010	NCBA1HK-331W	CAPACITOR	330pF,50V
C6011	NCB31CK-104X	CAPACITOR	0.1μF,16V
C6012	NCB31CK-473X	CAPACITOR	0.047μF,16V
C6013	NCB31CK-104X	CAPACITOR	0.1μF,16V
C6014	NCB31CK-104X	CAPACITOR	0.1μF,16V
C6015	NCB31CK-104X	CAPACITOR	0.1μF,16V
C6016	NCB31CK-333X	CAPACITOR	0.033μF,16V
C6017	NCBA1HK-102W	CAPACITOR	0.001μF,50V
C6018	NDCA1HJ-101W	CAPACITOR	100pF,50V
C6019	NDCA1HJ-330W	CAPACITOR	33pF,50V
C6020	NCBA1HK-102W	CAPACITOR	0.001μF,50V

# ⚠ REF No.	PART No.	PART NAME, DESCRIPTION	
C6021	NCBA1HK-102W	CAPACITOR	0.001μF,50V
C6022	NCBA1HK-102W	CAPACITOR	0.001μF,50V
C6023	NCBA1HK-102W	CAPACITOR	0.001μF,50V
C6024	NCBA1HK-102W	CAPACITOR	0.001μF,50V
C6025	NDCA1EJ-181W	CAPACITOR	180pF,25V
C6026	NCB11AK-225X-A	CAPACITOR	2.2μF,10V
C6027	NCB11AK-225X-A	CAPACITOR	2.2μF,10V
C6028	NCB11AK-225X-A	CAPACITOR	2.2μF,10V
C6029	NCB21AK-105X	CAPACITOR	1μF,10V
C6030	NCB11AK-225X-A	CAPACITOR	2.2μF,10V
C6031	NCB21AK-105X	CAPACITOR	1μF,10V
C6032	NCB11CK-105X	CAPACITOR	1μF,16V
C6033	NCB21AK-105X	CAPACITOR	1μF,10V
C6034	NCB11CK-105X	CAPACITOR	1μF,16V
C6035	NCB11CK-105X	CAPACITOR	1μF,16V
C6037	NCB21AK-105X	CAPACITOR	1μF,10V
C6038	NDCA1HJ-101W	CAPACITOR	100pF,50V
C6039	NCB31CK-104X	CAPACITOR	0.1μF,16V
C6040	NCBA1CK-223W	CAPACITOR	0.022μF,16V
C6041	NCB31CK-104X	CAPACITOR	0.1μF,16V
C6042	NCBA1HK-221W	CAPACITOR	220pF,50V
C6044	NCB21AK-105X	CAPACITOR	1μF,10V
C6045	NBG41AM-106X	T CAPACITOR	10μF,10V
C6046	NCB11AK-225X-A	CAPACITOR	2.2μF,10V
C6047	NCB11AK-225X-A	CAPACITOR	2.2μF,10V
C6048	NCB11AK-225X-A	CAPACITOR	2.2μF,10V
C6049	NCB11AK-225X-A	CAPACITOR	2.2μF,10V
C6050	NCB11AK-225X-A	CAPACITOR	2.2μF,10V
C6051	NCB21AK-105X	CAPACITOR	1μF,10V
C6054	NCB21AK-105X	CAPACITOR	1μF,10V
C6055	NCB21AK-105X	CAPACITOR	1μF,10V
C6056	NCB21AK-105X	CAPACITOR	1μF,10V
C6057	NCB21AK-105X	CAPACITOR	1μF,10V
C6058	NCB21AK-105X	CAPACITOR	1μF,10V
C6059	NCB11CK-105K	CAPACITOR	1μF,16V
C6060	NCB21AK-105X	CAPACITOR	1μF,10V
C6061	NCB21AK-105X	CAPACITOR	1μF,10V
C6062	NCB21AK-105X	CAPACITOR	1μF,10V
C6065	NCB11AK-225X-A	CAPACITOR	2.2μF,10V
C6068	NCB31CK-104X	CAPACITOR	0.1μF,16V
L6001	NQL20CM-220X	COIL	22μH
L6002	NQL20CM-220X	COIL	22μH
L6003	NQL28CM-100X	COIL	10μH
L6004	NQL28CM-100X	COIL	10μH
L6008	NQL28CM-100X	COIL	10μH
L6009	NQL28CM-100X	COIL	10μH
L6010	NQL28CM-100X	COIL	10μH
L6011	NQL20CM-100X	COIL	10μH
L6012	NQL20CM-100X	COIL	10μH
L6013	NQL28CM-100X	COIL	10μH
L6014	NQL28CM-100X	COIL	10μH
L6015	NQL28CM-100X	COIL	10μH
T6001	NQS0021-001X	SW TRANSF	
CN601	QGB0505L1-50X	CONNECTOR	
⚠ CP6001	ICP-S1.8-X	CIRCUIT PROTECTOR	
⚠ CP6002	ICP-S1.8-X	CIRCUIT PROTECTOR	
⚠ CP6003	ICP-S1.8-X	CIRCUIT PROTECTOR	
OT1	LY30016-077A	SPACER-A	
SD1	LY40730-001A	SHIELD SHEET,IC6001	
SD2	YQ44574	SHIELD SHEET,T6001	

# ⚠ REF No.	PART No.	PART NAME, DESCRIPTION	

****

PRE/MDA BOARD ASSEMBLY <04>

PW	YB10216A-02	PRE/MDA BOARD ASSY	
IC1601	AN3861SA	IC	
IC1602	TA75W01FU	IC	
IC1651	JCM5038-XE	IC	
IC3501	AN3730FA	IC	
IC3502	AN3740FAP	IC	
IC3503	SC371025AVFU	IC	
IC3504	M62366GP	IC	
Q1651	DTC143EE	TRANSISTOR	
Q1652	DTC143EE	TRANSISTOR	
Q3501	2SA1774/QRS/-X	TRANSISTOR	
Q3502	2SA1739/QR/-X	TRANSISTOR	
Q3503	XN4504	PAIR TRANSISTOR	
Q3504	2SA1577/QR/-X	TRANSISTOR	
Q3505	2SC4226/4/-X	TRANSISTOR	
Q3506	2SC4226/4/-X	TRANSISTOR	
Q3507	XN4504	PAIR TRANSISTOR	
Q3508	DTC144EE	TRANSISTOR	
Q3509	2SD1979/S/-X	TRANSISTOR	
Q3510	2SA1739/QR/-X	TRANSISTOR	
Q3511	2SA1774/QRS/-X	TRANSISTOR	
Q3512	DTC144EE	TRANSISTOR	
Q3513	UMG2N	TRANSISTOR	
Q3520	2SA1774/QRS/-X	TRANSISTOR	
Q3521	DTC144EE	TRANSISTOR	
Q3522	DTC144EE	TRANSISTOR	
Q3523	2SA1774/QRS/-X	TRANSISTOR	
Q3524	UMZ1N	PAIR TRANSISTOR	
Q3525	2SA1774/QRS/-X	TRANSISTOR	
Q3581	2SC4617/QRS/-X	TRANSISTOR	
D3501	DAN222	DIODE	
R1604	NRSA6AJ-683W	MG RESISTOR	68kΩ,1/16W
R1605	NRSA6AJ-183W	MG RESISTOR	18kΩ,1/16W
R1606	NRV142F-R22X	CMF RESISTOR	0.22Ω,1/4W
R1608	NRSA6AJ-472W	MG RESISTOR	4.7kΩ,1/16W
R1609	NRSA6AJ-333W	MG RESISTOR	33kΩ,1/16W
R1610	NRSA6AJ-681W	MG RESISTOR	680Ω,1/16W
R1611	NRSA6AJ-224W	MG RESISTOR	220kΩ,1/16W
R1612	NRSA6AJ-105W	MG RESISTOR	1MΩ,1/16W
R1615	NRSA6AJ-683W	MG RESISTOR	68kΩ,1/16W
R1616	NRSA6AJ-683W	MG RESISTOR	68kΩ,1/16W
R1617	NRSA6AJ-0R0W	MG RESISTOR	0Ω,1/16W
R1622	NRSA6AJ-0R0W	MG RESISTOR	0Ω,1/16W
R1623	NRSA6AJ-0R0W	MG RESISTOR	0Ω,1/16W
R1651	NRSA6AJ-2R2W	MG RESISTOR	2.2Ω,1/16W
R1652	NRSA6AJ-2R2W	MG RESISTOR	2.2Ω,1/16W
R1653	NRSA6AJ-2R2W	MG RESISTOR	2.2Ω,1/16W
R1654	NRSA6AJ-102W	MG RESISTOR	1kΩ,1/16W
R1655	NRSA6AJ-123W	MG RESISTOR	12kΩ,1/16W
R1656	NRSA6AJ-473W	MG RESISTOR	47kΩ,1/16W
R1657	NRSA6AJ-103W	MG RESISTOR	10kΩ,1/16W
R1659	NRS12BK-R47W	MG RESISTOR	0.47Ω,1/2W
R1660	NRSA6AJ-752W	MG RESISTOR	7.5kΩ,1/16W
R1661	NRSA6AJ-562W	MG RESISTOR	5.6kΩ,1/16W
R1662	NRSA6AJ-0R0W	MG RESISTOR	0Ω,1/16W
R1664	NRSA6AJ-102W	MG RESISTOR	1kΩ,1/16W
R1665	NRSA6AJ-123W	MG RESISTOR	12kΩ,1/16W

# ⚠ REF No.	PART No.	PART NAME, DESCRIPTION	
R1666	NRSA6AJ-104W	MG RESISTOR	100kΩ,1/16W
R1667	NRSA6AJ-681W	MG RESISTOR	680Ω,1/16W
R1668	NRSA6AJ-681W	MG RESISTOR	680Ω,1/16W
R1669	NRSA6AJ-473W	MG RESISTOR	47kΩ,1/16W
R1671	NRSA6AJ-0R0W	MG RESISTOR	0Ω,1/16W
R3501	NRSA6AJ-152W	MG RESISTOR	1.5kΩ,1/16W
R3502	NRSA6AJ-272W	MG RESISTOR	2.7kΩ,1/16W
R3503	NRSA6AJ-122W	MG RESISTOR	1.2kΩ,1/16W
R3505	NRSA6AJ-471W	MG RESISTOR	470Ω,1/16W
R3506	NRSA6AJ-271W	MG RESISTOR	270Ω,1/16W
R3507	NRSA6AJ-102W	MG RESISTOR	1kΩ,1/16W
R3508	NRSA6AJ-152W	MG RESISTOR	1.5kΩ,1/16W
R3509	NRSA6AJ-152W	MG RESISTOR	1.5kΩ,1/16W
R3510	NRSA6AJ-331W	MG RESISTOR	330Ω,1/16W
R3511	NRSA6AJ-152W	MG RESISTOR	1.5kΩ,1/16W
R3512	NRSA6AJ-123W	MG RESISTOR	12kΩ,1/16W
R3513	NRSA6AJ-123W	MG RESISTOR	12kΩ,1/16W
R3514	NRSA6AJ-152W	MG RESISTOR	1.5kΩ,1/16W
R3515	NRSA6AJ-152W	MG RESISTOR	1.5kΩ,1/16W
R3516	NRSA6AJ-152W	MG RESISTOR	1.5kΩ,1/16W
R3517	NRSA6AJ-152W	MG RESISTOR	1.5kΩ,1/16W
R3518	NRSA6AJ-102W	MG RESISTOR	1kΩ,1/16W
R3519	NRSA6AJ-271W	MG RESISTOR	270Ω,1/16W
R3520	NRSA6AJ-331W	MG RESISTOR	330Ω,1/16W
R3525	NRSA6AJ-103W	MG RESISTOR	10kΩ,1/16W
R3527	NRSA6AJ-223W	MG RESISTOR	22kΩ,1/16W
R3529	NRSA6AJ-681W	MG RESISTOR	680Ω,1/16W
R3530	NRVA6AD-100W	CMF RESISTOR	10Ω,1/16W
R3531	NRSA6AJ-102W	MG RESISTOR	1kΩ,1/16W
R3532	NRVA6AD-102W	CMF RESISTOR	1kΩ,1/16W
R3533	NRVA6AD-102W	CMF RESISTOR	1kΩ,1/16W
R3534	NRVA6AD-562W	CMF RESISTOR	5.6kΩ,1/16W
R3535	NRSA6AJ-681W	MG RESISTOR	680Ω,1/16W
R3536	NRVA6AD-332W	CMF RESISTOR	3.3kΩ,1/16W
R3537	NRVA6AD-123W	CMF RESISTOR	12kΩ,1/16W
R3538	NRSA6AJ-273W	MG RESISTOR	27kΩ,1/16W
R3539	NRVA6AD-182W	CMF RESISTOR	1.8kΩ,1/16W
R3540	NRVA6AD-103W	CMF RESISTOR	10kΩ,1/16W
R3541	NRSA6AJ-821W	MG RESISTOR	820Ω,1/16W
R3542	NRSA6AJ-224W	MG RESISTOR	220kΩ,1/16W
R3543	NRSA6AJ-680W	MG RESISTOR	68Ω,1/16W
R3545	NRVA6AD-152W	CMF RESISTOR	1.5kΩ,1/16W
R3546	NRVA6AD-153W	CMF RESISTOR	15kΩ,1/16W
R3547	NRVA6AD-102W	CMF RESISTOR	1kΩ,1/16W
R3548	NRSA6AJ-102W	MG RESISTOR	1kΩ,1/16W
R3550	NRSA6AJ-221W	MG RESISTOR	220Ω,1/16W
R3551	NRSA6AJ-223W	MG RESISTOR	22kΩ,1/16W
R3552	NRSA6AJ-103W	MG RESISTOR	10kΩ,1/16W
R3553	NRSA6AJ-0R0W	MG RESISTOR	0Ω,1/16W
R3554	NDCA1HJ-470W	CAPACITOR	47pF,50V
R3556	NRSA6AJ-273W	MG RESISTOR	27kΩ,1/16W
R3562	NRSA6AJ-102W	MG RESISTOR	1kΩ,1/16W
R3563	NRSA6AJ-182W	MG RESISTOR	1.8kΩ,1/16W
R3564	NRSA63J-470X	MG RESISTOR	47Ω,1/16W
R3565	NRSA63J-470X	MG RESISTOR	47Ω,1/16W
R3576	NRSA6AJ-223W	MG RESISTOR	22kΩ,1/16W
R3577	NRSA6AJ-103W	MG RESISTOR	10kΩ,1/16W
R3578	NRSA6AJ-124W	MG RESISTOR	120kΩ,1/16W
R3581	NRSA6AJ-473W	MG RESISTOR	47kΩ,1/16W
R3582	NRSA6AJ-331W	MG RESISTOR	330Ω,1/16W
R3583	NRSA6AJ-472W	MG RESISTOR	4.7kΩ,1/16W

# ⚠ REF No.	PART No.	PART NAME, DESCRIPTION	
R3584	NRSA6AJ-472W	MG RESISTOR	4.7kΩ,1/16W
R3585	NRSA6AJ-682W	MG RESISTOR	6.8kΩ,1/16W
R3586	NRSA6AJ-102W	MG RESISTOR	1kΩ,1/16W
R3593	NRSA6AJ-472W	MG RESISTOR	4.7kΩ,1/16W
R3596	NRSA6AJ-473W	MG RESISTOR	47kΩ,1/16W
R3598	NRSA6AJ-221W	MG RESISTOR	220Ω,1/16W
R3599	NRSA6AJ-101W	MG RESISTOR	100Ω,1/16W
C1601	NCBA1HK-152W	CAPACITOR	0.0015μF,50V
C1602	NCBA1HK-152W	CAPACITOR	0.0015μF,50V
C1603	NCBA1HK-152W	CAPACITOR	0.0015μF,50V
C1604	NCF31CZ-104X	CAPACITOR	0.1μF,16V
C1605	NCF31CZ-104X	CAPACITOR	0.1μF,16V
C1606	NCF31CZ-104X	CAPACITOR	0.1μF,16V
C1607	NCBA1CK-822W	CAPACITOR	0.0082μF,16V
C1608	NCBA1CK-822W	CAPACITOR	0.0082μF,16V
C1609	NCBA1CK-822W	CAPACITOR	0.0082μF,16V
C1610	NDCA1HJ-220W	CAPACITOR	22pF,50V
C1611	NCF31CZ-473X	CAPACITOR	0.047μF,16V
C1612	NCF31CZ-104X	CAPACITOR	0.1μF,16V
C1613	NCB31CK-104X	CAPACITOR	0.1μF,16V
C1614	NCBA1EK-472W	CAPACITOR	0.0047μF,25V
C1615	NBE20JM-106X	T CAPACITOR	10μF,6.3V
C1617	NCB21AK-105X	CAPACITOR	1μF,10V
C1618	NCB21AK-105X	CAPACITOR	1μF,10V
C1620	NCBA1HK-222W	CAPACITOR	0.0022μF,50V
C1621	NCBA1CK-103W	CAPACITOR	0.01μF,16V
C1622	NCBA1HK-471W	CAPACITOR	470pF,50V
C1651	NCF21CZ-105X	CAPACITOR	1μF,16V
C1652	NCF21CZ-105X	CAPACITOR	1μF,16V
C1653	NCF21CZ-105X	CAPACITOR	1μF,16V
C1654	NCB31EK-223X	CAPACITOR	0.022μF,25V
C1655	NCB31EK-223X	CAPACITOR	0.022μF,25V
C1656	NCB31EK-223X	CAPACITOR	0.022μF,25V
C1657	NCFA1AZ-104W	CAPACITOR	0.1μF,10V
C1658	NCFA1AZ-104W	CAPACITOR	0.1μF,10V
C1659	NCB31EK-223X	CAPACITOR	0.022μF,25V
C1660	NCB21AK-105X	CAPACITOR	1μF,10V
C1661	NCSA1HJ-101W	CAPACITOR	100pF,50V
C1662	NCF21CZ-105X	CAPACITOR	1μF,16V
C1663	NCB21AK-105X	CAPACITOR	1μF,10V
C1664	NBG20JM-106X	T CAPACITOR	10μF,6.3V
C1665	NBG20JM-106X	T CAPACITOR	10μF,6.3V
C3501	NCBA1CK-103W	CAPACITOR	0.01μF,16V
C3502	NCBA1HK-152W	CAPACITOR	0.0015μF,50V
C3504	NBE20JM-106X	T CAPACITOR	10μF,6.3V
C3505	NCFA1AZ-104W	CAPACITOR	0.1μF,10V
C3506	NBE40JM-476X	T CAPACITOR	47μF,6.3V
C3507	NBE20JM-106X	T CAPACITOR	10μF,6.3V
C3508	NCFA1AZ-104W	CAPACITOR	0.1μF,10V
C3509	NCFA1AZ-104W	CAPACITOR	0.1μF,10V
C3510	NCFA1AZ-104W	CAPACITOR	0.1μF,10V
C3511	NDCA1HJ-330W	CAPACITOR	33pF,50V
C3512	NBE20JM-106X	T CAPACITOR	10μF,6.3V
C3513	NDCA1HJ-330W	CAPACITOR	33pF,50V
C3514	NCFA1AZ-104W	CAPACITOR	0.1μF,10V
C3515	NCFA1AZ-104W	CAPACITOR	0.1μF,10V
C3516	NCFA1AZ-104W	CAPACITOR	0.1μF,10V
C3517	NCFA1AZ-104W	CAPACITOR	0.1μF,10V
C3518	NCBA1HK-122W	CAPACITOR	0.0012μF,50V
C3519	NCBA1HK-122W	CAPACITOR	0.0012μF,50V
C3520	NCFA1AZ-104W	CAPACITOR	0.1μF,10V

# ⚠ REF No.	PART No.	PART NAME, DESCRIPTION	
C3521	NCBA1HK-681W	CAPACITOR	680pF,50V
C3522	NBE20JM-106X	T CAPACITOR	10μF,6.3V
C3523	NCFA1AZ-104W	CAPACITOR	0.1μF,10V
C3524	NDCA1HJ-151W	CAPACITOR	150pF,50V
C3525	NDCA1HJ-151W	CAPACITOR	150pF,50V
C3527	NDCA1HJ-470W	CAPACITOR	47pF,50V
C3528	NCB21AK-105X	CAPACITOR	1μF,10V
C3529	NCB21AK-105X	CAPACITOR	1μF,10V
C3531	NDCA1HJ-101W	CAPACITOR	100pF,50V
C3532	NDCA1HJ-680W	CAPACITOR	68pF,50V
C3533	NCFA1AZ-104W	CAPACITOR	0.1μF,10V
C3534	NCFA1AZ-104W	CAPACITOR	0.1μF,10V
C3535	NCFA1AZ-104W	CAPACITOR	0.1μF,10V
C3536	NCFA1AZ-104W	CAPACITOR	0.1μF,10V
C3537	NCFA1AZ-104W	CAPACITOR	0.1μF,10V
C3538	NCBA1CK-103W	CAPACITOR	0.01μF,16V
C3539	NCBA1EK-562W	CAPACITOR	0.0056μF,25V
C3540	NCBA1EK-562W	CAPACITOR	0.0056μF,25V
C3541	NCBA1CK-223W	CAPACITOR	0.022μF,16V
C3542	NCBA1EK-562W	CAPACITOR	0.0056μF,25V
C3543	NCFA1AZ-104W	CAPACITOR	0.1μF,10V
C3544	NCFA1AZ-104W	CAPACITOR	0.1μF,10V
C3545	NCBA1HK-331W	CAPACITOR	330pF,50V
C3546	NCFA1AZ-104W	CAPACITOR	0.1μF,10V
C3547	NCFA1AZ-104W	CAPACITOR	0.1μF,10V
C3548	NCBA1HK-681W	CAPACITOR	680pF,50V
C3549	NCFA1AZ-104W	CAPACITOR	0.1μF,10V
C3550	NCFA1AZ-104W	CAPACITOR	0.1μF,10V
C3551	NCBA1HK-152W	CAPACITOR	0.0015μF,50V
C3552	NCFA1AZ-104W	CAPACITOR	0.1μF,10V
C3553	NBE20JM-106X	T CAPACITOR	10μF,6.3V
C3554	NCFA1AZ-104W	CAPACITOR	0.1μF,10V
C3555	NCFA1AZ-104W	CAPACITOR	0.1μF,10V
C3556	NCBA1CK-103W	CAPACITOR	0.01μF,16V
C3557	NCBA1CK-103W	CAPACITOR	0.01μF,16V
C3558	NCFA1AZ-104W	CAPACITOR	0.1μF,10V
C3559	NCFA1AZ-104W	CAPACITOR	0.1μF,10V
C3560	NCFA1AZ-104W	CAPACITOR	0.1μF,10V
C3561	NCFA1AZ-104W	CAPACITOR	0.1μF,10V
C3562	NCFA1AZ-104W	CAPACITOR	0.1μF,10V
C3563	NCFA1AZ-104W	CAPACITOR	0.1μF,10V
C3564	NCFA1AZ-104W	CAPACITOR	0.1μF,10V
C3565	NCB21AK-105X	CAPACITOR	1μF,10V
C3566	NBE40JM-476X	T CAPACITOR	47μF,6.3V
C3567	NBE40JM-476X	T CAPACITOR	47μF,6.3V
C3568	NCFA1AZ-104W	CAPACITOR	0.1μF,10V
C3569	NCB31CK-104X	CAPACITOR	0.1μF,16V
C3571	NCFA1AZ-104W	CAPACITOR	0.1μF,10V
C3572	NBE20JM-106X	T CAPACITOR	10μF,6.3V
C3575	NCBA1HK-152W	CAPACITOR	0.0015μF,50V
C3576	NCBA1HK-152W	CAPACITOR	0.0015μF,50V
C3581	NBE20JM-106X	T CAPACITOR	10μF,6.3V
C3582	NCFA1AZ-104W	CAPACITOR	0.1μF,10V
C3583	NBE20JM-106X	T CAPACITOR	10μF,6.3V
C3584	NCFA1AZ-104W	CAPACITOR	0.1μF,10V
C3585	NCBA1HK-222W	CAPACITOR	0.0022μF,50V
C3586	NBE20JM-106X	T CAPACITOR	10μF,6.3V
C3587	NCBA1CK-103W	CAPACITOR	0.01μF,16V
C3589	NCFA1AZ-104W	CAPACITOR	0.1μF,10V
C3590	NCBA1HK-102W	CAPACITOR	0.001μF,50V
C3591	NCFA1AZ-104W	CAPACITOR	0.1μF,10V

# ⚠ REF No.	PART No.	PART NAME, DESCRIPTION	
C3592	NBE20JM-106X	T CAPACITOR	10μF,6.3V
C3595	NCFA1AZ-104W	CAPACITOR	0.1μF,10V
L1601	NQL045K-100X	COIL	10μH
L1602	NQL045K-100X	COIL	10μH
L3501	NQR0006-001X	FERRITE BEAD	
L3503	NQL025J-220X	COIL	22μH
L3504	NQL025J-220X	COIL	22μH
L3505	NQL144K-220X	COIL	22μH
L3506	NQL025J-1R0X	COIL	1μH
L3507	NQL025J-1R0X	COIL	1μH
L3508	NQL034K-100X	COIL	10μH
L3532	NQL045K-100X	COIL	10μH
L3571	NQL144K-220X	COIL	22μH
L3581	NQL144K-220X	COIL	22μH
L3583	NQL144K-220X	COIL	22μH
LC3501	NQR0020-013X	N FILTER	
LC3502	NQR0020-013X	N FILTER	
S1	NSW0050-001X	PUSH SWITCH	
TH3501	NAD0002-153X	N THERMISTOR	
TH3502	NAD0002-682X	N THERMISTOR	
CN1	QGF0505F1-08X	FPC CONNECTOR	
CN2	QGB0504K1-60X	CONNECTOR	
CN3	QGF0505F1-11X	FPC CONNECTOR	
CN4	QGF0505F1-18X	FPC CONNECTOR	
SD1	LY30532-001B	SHIELD CASE	

****

MONITOR BOARD ASSEMBLY <05>

PW	YB10219B-01	MONITOR BOARD ASSY	
IC7601	CXA1785AR	IC	
IC7602	TK11900M	IC	
IC7701	MN83951-HT	IC	
IC7703	BA15532F	IC	
IC7704	BA4558F	IC	
IC7705	TC7S14FU	IC(DIGITAL)	
IC7708	AK9813AF	IC	
IC7709	TC7S86FU	IC(DIGITAL)	
Q7501	DTC144EE	TRANSISTOR	
Q7503	DTA144EE	TRANSISTOR	
Q7504	FX507	PAIR TRANSISTOR	
Q7601	DTC144EE	TRANSISTOR	
Q7602	2SA1774/QR/-X	TRANSISTOR	
Q7603	DTC144EE	TRANSISTOR	
Q7605	DTC144EE	TRANSISTOR	
Q7606	2SC4617/QR/-X	TRANSISTOR	
Q7607	DTA144EE	TRANSISTOR	
Q7702	DTA144EE	TRANSISTOR	
Q7704	DTA144EE	TRANSISTOR	
Q7705	DTC144EE	TRANSISTOR	
Q7706	DTA144EE	TRANSISTOR	
D7601	MA111	DIODE	
D7701	MA111	DIODE	
D7703	MA365	VARI CAP DIODE	
D7704	RB471E	DIODE	
R7503	NRSA63J-102X	MG RESISTOR	1kΩ,1/16W
R7504	NRSA63J-681X	MG RESISTOR	680Ω,1/16W
R7505	NRSA63J-681X	MG RESISTOR	680Ω,1/16W

# ⚠ REF No.	PART No.	PART NAME, DESCRIPTION	
R7507	NRSA63J-101X	MG RESISTOR	100Ω,1/16W
R7601	NRSA63J-271X	MG RESISTOR	270Ω,1/16W
R7603	NRSA63J-0R0X	MG RESISTOR	0Ω,1/16W
R7606	NRSA63J-223X	MG RESISTOR	22kΩ,1/16W
R7607	NRSA63J-223X	MG RESISTOR	22kΩ,1/16W
R7608	NRSA63J-223X	MG RESISTOR	22kΩ,1/16W
R7610	NRSA63J-0R0X	MG RESISTOR	0Ω,1/16W
R7611	NRSA63J-0R0X	MG RESISTOR	0Ω,1/16W
R7613	NRVA63D-392X	CMF RESISTOR	3.9kΩ,1/16W
R7614	NRVA63D-392X	CMF RESISTOR	3.9kΩ,1/16W
R7615	NRVA63D-392X	CMF RESISTOR	3.9kΩ,1/16W
R7616	NRVA63D-392X	CMF RESISTOR	3.9kΩ,1/16W
R7617	NRVA63D-392X	CMF RESISTOR	3.9kΩ,1/16W
R7618	NRVA63D-392X	CMF RESISTOR	3.9kΩ,1/16W
R7619	NRSA63J-471X	MG RESISTOR	470Ω,1/16W
R7620	NRSA63J-471X	MG RESISTOR	470Ω,1/16W
R7621	NRSA63J-471X	MG RESISTOR	470Ω,1/16W
R7622	NRSA63J-103X	MG RESISTOR	10kΩ,1/16W
R7623	NRSA63J-333X	MG RESISTOR	33kΩ,1/16W
R7625	NRSA63J-223X	MG RESISTOR	22kΩ,1/16W
R7626	NRSA63J-223X	MG RESISTOR	22kΩ,1/16W
R7627	NRSA63J-223X	MG RESISTOR	22kΩ,1/16W
R7628	NRSA63J-223X	MG RESISTOR	22kΩ,1/16W
R7629	NRSA63J-223X	MG RESISTOR	22kΩ,1/16W
R7630	NRSA63J-223X	MG RESISTOR	22kΩ,1/16W
R7631	NRSA63J-103X	MG RESISTOR	10kΩ,1/16W
R7632	NRSA63J-333X	MG RESISTOR	33kΩ,1/16W
R7634	NRSA63J-103X	MG RESISTOR	10kΩ,1/16W
R7635	NRSA63J-333X	MG RESISTOR	33kΩ,1/16W
R7637	NRSA63J-223X	MG RESISTOR	22kΩ,1/16W
R7638	NRSA63J-223X	MG RESISTOR	22kΩ,1/16W
R7639	NRSA63J-223X	MG RESISTOR	22kΩ,1/16W
R7640	NRSA63J-223X	MG RESISTOR	22kΩ,1/16W
R7641	NRSA63J-0R0X	MG RESISTOR	0Ω,1/16W
R7649	NRSA63J-0R0X	MG RESISTOR	0Ω,1/16W
R7651	NRSA63J-103X	MG RESISTOR	10kΩ,1/16W
R7652	NRSA63J-223X	MG RESISTOR	22kΩ,1/16W
R7655	NRVA63D-183X	CMF RESISTOR	18kΩ,1/16W
R7656	NRSA63J-564X	MG RESISTOR	560kΩ,1/16W
R7657	NRVA63D-473X	CMF RESISTOR	47kΩ,1/16W
R7658	NRVA63D-683X	CMF RESISTOR	68kΩ,1/16W
R7660	NRVA63D-471X	CMF RESISTOR	470Ω,1/16W
R7661	NRVA63D-153X	CMF RESISTOR	15kΩ,1/16W
R7662	NRVA63D-562X	CMF RESISTOR	5.6kΩ,1/16W
R7669	NRSA63J-103X	MG RESISTOR	10kΩ,1/16W
R7670	NRSA63J-561X	MG RESISTOR	560Ω,1/16W
R7672	NRSA63J-223X	MG RESISTOR	22kΩ,1/16W
R7673	NRSA63J-223X	MG RESISTOR	22kΩ,1/16W
R7675	NRSA63J-103X	MG RESISTOR	10kΩ,1/16W
R7676	NRSA63J-472X	MG RESISTOR	4.7kΩ,1/16W
R7701	NRSA63J-222X	MG RESISTOR	2.2kΩ,1/16W
R7702	NRSA63J-0R0X	MG RESISTOR	0Ω,1/16W
R7708	NRSA63J-0R0X	MG RESISTOR	0Ω,1/16W
R7710	NRSA63J-0R0X	MG RESISTOR	0Ω,1/16W
R7712	NRSA63J-103X	MG RESISTOR	10kΩ,1/16W
R7713	NRSA63J-101X	MG RESISTOR	100Ω,1/16W
R7714	NRSA63J-101X	MG RESISTOR	100Ω,1/16W
R7715	NRSA63J-101X	MG RESISTOR	100Ω,1/16W
R7716	NRSA63J-104X	MG RESISTOR	100kΩ,1/16W
R7717	NRSA63J-0R0X	MG RESISTOR	0Ω,1/16W
R7720	NRSA63J-0R0X	MG RESISTOR	0Ω,1/16W

# ⚠ REF No.	PART No.	PART NAME, DESCRIPTION	
R7721	NRSA63J-103X	MG RESISTOR	10kΩ,1/16W
R7722	NRSA63J-0R0X	MG RESISTOR	0Ω,1/16W
R7723	NRSA63J-0R0X	MG RESISTOR	0Ω,1/16W
R7724	NRSA63J-102X	MG RESISTOR	1kΩ,1/16W
R7725	NRSA63J-0R0X	MG RESISTOR	0Ω,1/16W
R7727	NRSA63J-103X	MG RESISTOR	10kΩ,1/16W
R7736	NRSA63J-103X	MG RESISTOR	10kΩ,1/16W
R7738	NRSA63J-103X	MG RESISTOR	10kΩ,1/16W
R7739	NRSA63J-103X	MG RESISTOR	10kΩ,1/16W
R7740	NRVA63D-822X	CMF RESISTOR	8.2kΩ,1/16W
R7741	NRVA63D-102X	CMF RESISTOR	1kΩ,1/16W
R7742	NRVA63D-333X	CMF RESISTOR	33kΩ,1/16W
R7743	NRVA63D-363X	CMF RESISTOR	36kΩ,1/16W
R7744	NRVA63D-561X	CMF RESISTOR	560Ω,1/16W
R7745	NRVA63D-563X	CMF RESISTOR	56kΩ,1/16W
R7746	NRVA63D-223X	CMF RESISTOR	22kΩ,1/16W
R7747	NRVA63D-182X	CMF RESISTOR	1.8kΩ,1/16W
R7748	NRVA63D-102X	CMF RESISTOR	1kΩ,1/16W
R7749	NRSA63J-0R0X	MG RESISTOR	0Ω,1/16W
R7750	NRSA63J-105X	MG RESISTOR	1MΩ,1/16W
R7751	NRVA63D-153X	CMF RESISTOR	15kΩ,1/16W
R7752	NRSA63J-683X	MG RESISTOR	68kΩ,1/16W
R7753	NRSA63J-333X	MG RESISTOR	33kΩ,1/16W
R7754	NRSA63J-103X	MG RESISTOR	10kΩ,1/16W
R7760	NRSA63J-683X	MG RESISTOR	68kΩ,1/16W
R7761	NRVA63D-102X	CMF RESISTOR	1kΩ,1/16W
R7762	NRVA63D-303X	CMF RESISTOR	30kΩ,1/16W
R7763	NRVA63D-223X	CMF RESISTOR	22kΩ,1/16W
R7764	NRVA63D-683X	CMF RESISTOR	68kΩ,1/16W
R7765	NRSA63J-153X	MG RESISTOR	15kΩ,1/16W
R7766	NRSA63J-682X	MG RESISTOR	6.8kΩ,1/16W
R7767	NRSA63J-683X	MG RESISTOR	68kΩ,1/16W
R7768	NRSA63J-0R0X	MG RESISTOR	0Ω,1/16W
R7769	NRSA63J-473X	MG RESISTOR	47kΩ,1/16W
R7770	NRSA63J-223X	MG RESISTOR	22kΩ,1/16W
R7771	NRSA63J-105X	MG RESISTOR	1MΩ,1/16W
R7772	NRSA63J-683X	MG RESISTOR	68kΩ,1/16W
R7773	NRSA63J-103X	MG RESISTOR	10kΩ,1/16W
R7774	NRSA63J-474X	MG RESISTOR	470kΩ,1/16W
R7775	NRSA63J-393X	MG RESISTOR	39kΩ,1/16W
R7776	NRSA63J-393X	MG RESISTOR	39kΩ,1/16W
R7777	NRSA63J-103X	MG RESISTOR	10kΩ,1/16W
R7778	NRSA63J-753X	MG RESISTOR	75kΩ,1/16W
R7780	NRVA63D-223X	CMF RESISTOR	22kΩ,1/16W
R7781	NRVA63D-223X	CMF RESISTOR	22kΩ,1/16W
C7501	NBE51AM-476X	T CAPACITOR	47μF,10V
C7502	NFV41HJ-153X	MPPS CAPACITOR	0.015μF,50V
C7503	NCZ1011-270X	CAPACITOR	27pF,3K
C7504	NCZ1011-220X	CAPACITOR	22pF,3K
C7601	NCB21CK-334X	CAPACITOR	0.33μF,16V
C7602	NBE20JM-106X	T CAPACITOR	10μF,6.3V
C7604	NCB31HK-103X	CAPACITOR	0.01μF,50V
C7605	NCB31HK-103X	CAPACITOR	0.01μF,50V
C7606	NCB31HK-103X	CAPACITOR	0.01μF,50V
C7607	NCB21AK-105X	CAPACITOR	1μF,10V
C7609	NBE21AM-106X	T CAPACITOR	10μF,10V
C7610	NCB21AK-105X	CAPACITOR	1μF,10V
C7612	NBE21AM-106X	T CAPACITOR	10μF,10V
C7613	NCB21AK-105X	CAPACITOR	1μF,10V
C7615	NBE21AM-106X	T CAPACITOR	10μF,10V
C7616	NBE21DM-225X	T CAPACITOR	2.2μF,20V

# ⚠ REF No.	PART No.	PART NAME, DESCRIPTION	
C7617	NCB31CK-104X	CAPACITOR	0.1μF,16V
C7618	NCB31HK-103X	CAPACITOR	0.01μF,50V
C7619	NCB31HK-103X	CAPACITOR	0.01μF,50V
C7620	NCB31HK-103X	CAPACITOR	0.01μF,50V
C7621	NCB31HK-103X	CAPACITOR	0.01μF,50V
C7622	NCB31HK-103X	CAPACITOR	0.01μF,50V
C7623	NCB31HK-103X	CAPACITOR	0.01μF,50V
C7624	NCB31HK-103X	CAPACITOR	0.01μF,50V
C7625	NCB31HK-103X	CAPACITOR	0.01μF,50V
C7626	NCB31HK-103X	CAPACITOR	0.01μF,50V
C7627	NCB31CK-104X	CAPACITOR	0.1μF,16V
C7628	NCB31HK-682X	CAPACITOR	0.0068μF,50V
C7629	NBE21AM-225X	T CAPACITOR	2.2μF,10V
C7630	NCB31CK-104X	CAPACITOR	0.1μF,16V
C7640	NCB21AK-105X	CAPACITOR	1μF,10V
C7641	NCB31HK-103X	CAPACITOR	0.01μF,50V
C7642	NBE21AM-106X	T CAPACITOR	10μF,10V
C7643	NBE40JM-476X	T CAPACITOR	47μF,6.3V
C7644	NCB21AK-105X	CAPACITOR	1μF,10V
C7645	NBE21AM-106X	T CAPACITOR	10μF,10V
C7646	NCB21AK-105X	CAPACITOR	1μF,10V
C7647	NBE21EM-105X	T CAPACITOR	1μF,25V
C7704	NDC31HJ-100X	CAPACITOR	10pF,50V
C7705	NDC31HJ-100X	CAPACITOR	10pF,50V
C7706	NDC31HJ-100X	CAPACITOR	10pF,50V
C7707	NCB31CK-104X	CAPACITOR	0.1μF,16V
C7708	NCB31CK-104X	CAPACITOR	0.1μF,16V
C7709	NCB31CK-104X	CAPACITOR	0.1μF,16V
C7710	NCB21AK-105X	CAPACITOR	1μF,10V
C7711	NBE20JM-335X	T CAPACITOR	3.3μF,6.3V
C7714	NCB31CK-104X	CAPACITOR	0.1μF,16V
C7716	NDC31HJ-820X	CAPACITOR	82pF,50V
C7717	NCB31HK-102X	CAPACITOR	0.001μF,50V
C7720	NBE21AM-106X	T CAPACITOR	10μF,10V
C7721	NDC31HJ-330X	CAPACITOR	33pF,50V
C7722	NBE41EM-475X	T CAPACITOR	4.7μF,25V
C7723	NCB31CK-104X	CAPACITOR	0.1μF,16V
C7724	NCB31CK-104X	CAPACITOR	0.1μF,16V
C7725	NCB31CK-104X	CAPACITOR	0.1μF,16V
C7726	NBE41EM-475X	T CAPACITOR	4.7μF,25V
C7727	NBE21CM-225X	T CAPACITOR	2.2μF,16V
C7728	NCB31CK-104X	CAPACITOR	0.1μF,16V
C7729	NCB31CK-104X	CAPACITOR	0.1μF,16V
C7730	NCF21CZ-105X	CAPACITOR	1μF,16V
C7731	NCB31CK-104X	CAPACITOR	0.1μF,16V
C7732	NCB21AK-105X	CAPACITOR	1μF,10V
C7733	NCB31HK-561X	CAPACITOR	560pF,50V
C7734	NCB31HK-102X	CAPACITOR	0.001μF,50V
C7735	NDC31HJ-121X	CAPACITOR	120pF,50V
C7736	NCB31CK-104X	CAPACITOR	0.1μF,16V
C7737	NBE21DM-225X	T CAPACITOR	2.2μF,20V
C7740	NCB21AK-105X	CAPACITOR	1μF,10V
C7742	NDC31HJ-330X	CAPACITOR	33pF,50V
C7745	NCB31CK-104X	CAPACITOR	0.1μF,16V
C7750	NBE21AM-685X	T CAPACITOR	6.8μF,10V
C7751	NCB31CK-104X	CAPACITOR	0.1μF,16V
C7752	NCB31CK-104X	CAPACITOR	0.1μF,16V
L7501	PELN1200-220MP	COIL	22μH
L7502	NQL19CM-101X	COIL	100μH
L7601	NQL144K-220X	COIL	22μH
L7602	NQL144K-100X	COIL	10μH

# ⚠ REF No.	PART No.	PART NAME, DESCRIPTION	
L7603	NQL144K-100X	COIL	10μH
L7604	NQL144K-220X	COIL	22μH
L7605	NQL144K-220X	COIL	22μH
L7701	NQL144K-220X	COIL	22μH
L7702	NQL144K-220X	COIL	22μH
L7703	NQL024J-1R8X	COIL	1.8μH
L7705	NQL144K-220X	COIL	22μH
⚠ TH7501	NAD0019-471X	P THERMISTOR	
T7501	NQS0022-001	SW TRANSF	
BK1	LY30536-001C	BRACKET 1	
BK2	LY40562-001B	BRACKET(2)	
CN741	QGF0505F2-16X	FPC CONNE	
CN742	QGF0505F2-16X	FPC CONNE	
CN743	QGF0501F1-24X	FPC CONNE	
CN7501	QGA3501F1-02X	CONNECTOR	
⚠ F7501	PEMC1155-R40Z	FUSE	T0.4A
OT1	LY30016-074A	SPACER-A,BRACKET 1	
SD1	LY40747-001A	SHIELD SHEET	

****

VF BOARD ASSEMBLY <06>

PW	YB20810A-02	VF BOARD ASSY	
Q7301	2SK2055	MOS FET	
R7301	NRSA63J-104X	MG RESISTOR	100kΩ,1/16W
C7301	NBE71CM-336X	T CAPACITOR	33μF,16V
C7302	NCB31CK-104X	CAPACITOR	0.1μF,16V
L7301	NQL144K-100X	COIL	
T7301	NQH0004-001X	FB TRANSF	
BL7301	NLL0003-001	LAMP	
CN7301	QGF0503C1-20X	FPC CONNECTOR	
CN7302	QGF0503C1-16X	FPC CONNECTOR	

****

CCD BOARD ASSEMBLY <07>

PW	YB10218E	CCD BOARD ASSY	
IC5001	JCY0085	IC	
IC5002	JCY0065A	IC	
IC5101	CXA2096N	IC	
IC5102	CXA2096N	IC	
Q5001	2SC3931/CD/-X	TRANSISTOR	
Q5002	2SC3931/CD/-X	TRANSISTOR	
Q5101	UMZ1N	PAIR TRANSISTOR	
Q5102	UMZ1N	PAIR TRANSISTOR	
D5001	1SS355	DIODE	
D5002	1SS355	DIODE	
D5003	1SS355	DIODE	
D5004	MA732	SB DIODE	
R5001	NRSA6AJ-105W	MG RESISTOR	1MΩ,1/16W
R5002	NRSA6AJ-104W	MG RESISTOR	100kΩ,1/16W
R5003	NRSA6AJ-0R0W	MG RESISTOR	0Ω,1/16W
R5004	NRSA6AJ-0R0W	MG RESISTOR	0Ω,1/16W
R5005	NRSA6AJ-0R0W	MG RESISTOR	0Ω,1/16W
R5006	NRSA6AJ-0R0W	MG RESISTOR	0Ω,1/16W

# ⚠ REF No.	PART No.	PART NAME, DESCRIPTION	
R5007	NRSA6AJ-0R0W	MG RESISTOR	0Ω,1/16W
R5008	NRSA6AJ-0R0W	MG RESISTOR	0Ω,1/16W
R5010	NRSA6AJ-0R0W	MG RESISTOR	0Ω,1/16W
R5011	NRSA63J-0R0X	MG RESISTOR	0Ω,1/16W
R5013	NRSA63J-0R0X	MG RESISTOR	0Ω,1/16W
R5014	NRSA63J-0R0X	MG RESISTOR	0Ω,1/16W
R5015	NRSA6AJ-0R0W	MG RESISTOR	0Ω,1/16W
R5016	NRSA6AJ-0R0W	MG RESISTOR	0Ω,1/16W
R5017	NRSA6AJ-0R0W	MG RESISTOR	0Ω,1/16W
R5018	NRSA6AJ-0R0W	MG RESISTOR	0Ω,1/16W
R5019	NRSA6AJ-0R0W	MG RESISTOR	0Ω,1/16W
R5020	NRSA6AJ-0R0W	MG RESISTOR	0Ω,1/16W
R5021	NRSA6AJ-0R0W	MG RESISTOR	0Ω,1/16W
R5022	NRSA6AJ-0R0W	MG RESISTOR	0Ω,1/16W
R5023	NRSA6AJ-0R0W	MG RESISTOR	0Ω,1/16W
R5024	NRSA6AJ-104W	MG RESISTOR	100kΩ,1/16W
R5025	NRSA6AJ-100W	MG RESISTOR	10Ω,1/16W
R5026	NRSA6AJ-562W	MG RESISTOR	5.6kΩ,1/16W
R5027	NRSA6AJ-100W	MG RESISTOR	10Ω,1/16W
R5028	NRSA6AJ-562W	MG RESISTOR	5.6kΩ,1/16W
R5029	NRSA6AJ-102W	MG RESISTOR	1kΩ,1/16W
R5030	NRSA6AJ-102W	MG RESISTOR	1kΩ,1/16W
R5032	NRSA6AJ-0R0W	MG RESISTOR	0Ω,1/16W
R5033	NRSA6AJ-102W	MG RESISTOR	1kΩ,1/16W
R5034	NRSA6AJ-102W	MG RESISTOR	1kΩ,1/16W
R5035	NRSA6AJ-102W	MG RESISTOR	1kΩ,1/16W
R5039	NRSA6AJ-473W	MG RESISTOR	47kΩ,1/16W
R5101	NRSA6AJ-220W	MG RESISTOR	22Ω,1/16W
R5102	NRSA6AJ-220W	MG RESISTOR	22Ω,1/16W
R5103	NRSA6AJ-102W	MG RESISTOR	1kΩ,1/16W
R5105	NRSA6AJ-102W	MG RESISTOR	1kΩ,1/16W
R5108	NRSA6AJ-102W	MG RESISTOR	1kΩ,1/16W
R5110	NRSA6AJ-182W	MG RESISTOR	1.8kΩ,1/16W
R5111	NRSA6AJ-0R0W	MG RESISTOR	0Ω,1/16W
R5113	NRSA6AJ-621W	MG RESISTOR	620Ω,1/16W
R5114	NRSA6AJ-182W	MG RESISTOR	1.8kΩ,1/16W
R5116	NRSA6AJ-182W	MG RESISTOR	1.8kΩ,1/16W
R5119	NRSA6AJ-0R0W	MG RESISTOR	0Ω,1/16W
R5121	NRSA6AJ-0R0W	MG RESISTOR	0Ω,1/16W
R5122	NRSA6AJ-0R0W	MG RESISTOR	0Ω,1/16W
R5123	NRSA6AJ-0R0W	MG RESISTOR	0Ω,1/16W
R5124	NRSA6AJ-0R0W	MG RESISTOR	0Ω,1/16W
R5125	NRSA6AJ-0R0W	MG RESISTOR	0Ω,1/16W
R5126	NRSA6AJ-102W	MG RESISTOR	1kΩ,1/16W
R5127	NRSA6AJ-222W	MG RESISTOR	2.2kΩ,1/16W
R5129	NRSA6AJ-102W	MG RESISTOR	1kΩ,1/16W
R5130	NRSA6AJ-222W	MG RESISTOR	2.2kΩ,1/16W
R5132	NRSA6AJ-0R0W	MG RESISTOR	0Ω,1/16W
C5001	NBE41VM-225X	T CAPACITOR	2.2μF,35V
C5002	NCFA1HZ-103W	CAPACITOR	0.01μF,50V
C5004	NBM90JM-106X	T CAPACITOR	10μF,6.3V
C5005	NCFA1AZ-104W	CAPACITOR	0.1μF,10V
C5006	NBE41CM-106X	T CAPACITOR	10μF,16V
C5007	NCFA1AZ-104W	CAPACITOR	0.1μF,10V
C5009	NBE90JM-106X	T CAPACITOR	10μF,6.3V
C5010	NCFA1AZ-104W	CAPACITOR	0.1μF,10V
C5011	NBE40JM-476X	T CAPACITOR	47μF,6.3V
C5012	NCFA1AZ-104W	CAPACITOR	0.1μF,10V
C5013	NBE90JM-106X	T CAPACITOR	10μF,6.3V
C5014	NCFA1AZ-104W	CAPACITOR	0.1μF,10V
C5015	NCFA1AZ-104W	CAPACITOR	0.1μF,10V

# ⚠ REF No.	PART No.	PART NAME, DESCRIPTION	
C5016	NCFA1AZ-104W	CAPACITOR	0.1μF,10V
C5017	NCFA1AZ-104W	CAPACITOR	0.1μF,10V
C5018	NCFA1AZ-104W	CAPACITOR	0.1μF,10V
C5019	NCFA1AZ-104W	CAPACITOR	0.1μF,10V
C5020	NCFA1AZ-104W	CAPACITOR	0.1μF,10V
C5021	NCFA1HZ-103W	CAPACITOR	0.01μF,50V
C5022	NCFA1AZ-104W	CAPACITOR	0.1μF,10V
C5023	NCFA1HZ-103W	CAPACITOR	0.01μF,50V
C5024	NCFA1AZ-104W	CAPACITOR	0.1μF,10V
C5025	NBE21VM-105X	T CAPACITOR	1μF,35V
C5026	NCF31EZ-104X	CAPACITOR	0.1μF,25V
C5027	NCF31EZ-104X	CAPACITOR	0.1μF,25V
C5028	NCFA1AZ-104W	CAPACITOR	0.1μF,10V
C5029	NCFA1AZ-104W	CAPACITOR	0.1μF,10V
C5030	NCFA1AZ-104W	CAPACITOR	0.1μF,10V
C5031	NCFA1AZ-104W	CAPACITOR	0.1μF,10V
C5032	NCFA1AZ-104W	CAPACITOR	0.1μF,10V
C5033	NCFA1AZ-104W	CAPACITOR	0.1μF,10V
C5034	NBE91CM-105X	T CAPACITOR	1μF,16V
C5035	NBE91CM-105X	T CAPACITOR	1μF,16V
C5036	NCFA1AZ-104W	CAPACITOR	0.1μF,10V
C5037	NCFA1HZ-103W	CAPACITOR	0.01μF,50V
C5038	NCF31EZ-104X	CAPACITOR	0.1μF,25V
C5039	NBE21EM-105X	T CAPACITOR	1μF,25V
C5040	NCFA1HZ-103W	CAPACITOR	0.01μF,50V
C5041	NCFA1HZ-103W	CAPACITOR	0.01μF,50V
C5042	NCFA1AZ-104W	CAPACITOR	0.1μF,10V
C5101	NCFA1AZ-104W	CAPACITOR	0.1μF,10V
C5102	NBE40JM-476X	T CAPACITOR	47μF,6.3V
C5103	NCFA1AZ-104W	CAPACITOR	0.1μF,10V
C5104	NBE40JM-476X	T CAPACITOR	47μF,6.3V
C5105	NCFA1AZ-104W	CAPACITOR	0.1μF,10V
C5106	NCFA1AZ-104W	CAPACITOR	0.1μF,10V
C5107	NCFA1AZ-104W	CAPACITOR	0.1μF,10V
C5108	NCF21CZ-105X	CAPACITOR	1μF,16V
C5109	NCF21CZ-105X	CAPACITOR	1μF,16V
C5110	NBE90JM-106X	T CAPACITOR	10μF,6.3V
C5111	NBE90JM-106X	T CAPACITOR	10μF,6.3V
C5112	NCFA1AZ-104W	CAPACITOR	0.1μF,10V
C5113	NCFA1AZ-104W	CAPACITOR	0.1μF,10V
C5114	NCFA1AZ-104W	CAPACITOR	0.1μF,10V
C5115	NCFA1AZ-104W	CAPACITOR	0.1μF,10V
C5116	NCF21CZ-105X	CAPACITOR	1μF,16V
C5117	NCF21CZ-105X	CAPACITOR	1μF,16V
C5118	NBE90JM-106X	T CAPACITOR	10μF,6.3V
C5119	NBE90JM-106X	T CAPACITOR	10μF,6.3V
C5120	NCFA1AZ-104W	CAPACITOR	0.1μF,10V
C5121	NCFA1AZ-104W	CAPACITOR	0.1μF,10V
C5122	NCFA1AZ-104W	CAPACITOR	0.1μF,10V
C5123	NCFA1AZ-104W	CAPACITOR	0.1μF,10V
C5124	NCFA1AZ-104W	CAPACITOR	0.1μF,10V
C5125	NCFA1AZ-104W	CAPACITOR	0.1μF,10V
C5126	NCFA1AZ-104W	CAPACITOR	0.1μF,10V
C5127	NBE40JM-476X	T CAPACITOR	47μF,6.3V
C5128	NBE40JM-476X	T CAPACITOR	47μF,6.3V
C5129	NBM90JM-106X	T CAPACITOR	10μF,6.3V
C5130	NCFA1AZ-104W	CAPACITOR	0.1μF,10V
C5131	NCFA1AZ-104W	CAPACITOR	0.1μF,10V
L5001	NQL045K-100X	COIL	10μH
L5002	NQL045K-100X	COIL	10μH
L5003	NQL045K-100X	COIL	10μH

# ⚠ REF No.	PART No.	PART NAME, DESCRIPTION	
L5004	NQL045K-100X	COIL	10μH
L5005	NQL045K-100X	COIL	10μH
L5006	NQL045K-100X	COIL	10μH
L5007	NQR0129-002X	FERRITE BEAD	
L5008	NQR0129-002X	FERRITE BEAD	
L5009	NQR0129-002X	FERRITE BEAD	
L5010	NQR0129-002X	FERRITE BEAD	
L5101	NQL045K-100X	COIL	10μH
L5102	NQL045K-100X	COIL	10μH
L5103	NQL045K-100X	COIL	10μH
X5001	NAX0190-001X	CXO	
CN501	NNZ0014-001X	CCD SOCKET	
CN502	QGB0503M1-40X	CONNECTOR	
OT1	LY30016-097A	SPACER-A,X2 CN502	

****

OERATION(DECK) BOARD ASSEMBLY <11>

PW	LY10100-002B	OPERATION(DECK)BOARD ASSY

****

OERATION(CAMERA) BOARD ASSEMBLY <12>

PW	LY20197-002B	OPERATION(CAMERA)BOARD ASSY

****

IR BOARD ASSEMBLY <13>

PW	LY30589-001D	IR BOARD ASSY

# ⚠ REF No.	PART No.	PART NAME, DESCRIPTION

SECTION 6
TECHNICAL INFORMATION

6.1 EMERGENCY DISPLAY

When there is something abnormal with this Digital VideoMovie during operation, an error number (Example: E01) representing the trouble appears on the LCD monitor.

E. VF DISPLAY	Emergency mode	Symptom	Surveillance mode	Mode to shif
E01	LOADING	The mechanism does not shift to the next mode (in the LOADING direction) though it has passed more than 4 seconds after the mechanism was required to do it.	LOADING	Maintain the status quo.
E02	UNLOADING	The mechanism does not shift to the next mode (in the UNLOADING direction) though it has passed more than 4 seconds after the mechanism was required to do it.	UNLOADING	
E03	REEL FG	No REEL FG (TU or SUP) signal is input for more than 4 seconds in the mode that the reel must rotate.	When reel is rotating.	STOP
E04	DRUM FG	No DRUM FG signal is input for more than 3 seconds in the mode that the drum motor must rotate.	When drum is rotating.	STOP
–	–		–	–
E06	CAPSTAN FG	No CAPSTAN FG signal is input for more than 1.5 seconds in the mode that the capstan motor must rotate (the pinch roller is pressed to the capstan).	When capstan is rotating (pinch roller is pressed to it).	STOP

Note : Only the operation to turn on/off the power is effectual in any emergency mode.

6.2 TEST MODE

6.2.1 General statement

This Digital VideoMovie is provided with three test modes that are the concealed function for servicing.

① Color bar mode (to record color bar signal)
② Shuffle through mode (to send playback signal by a bypass away from the camera circuit which playback signal normally passes through)
② Concealment mode (to inactivate concealment correction in playback mode)

6.2.2 How to set test mode

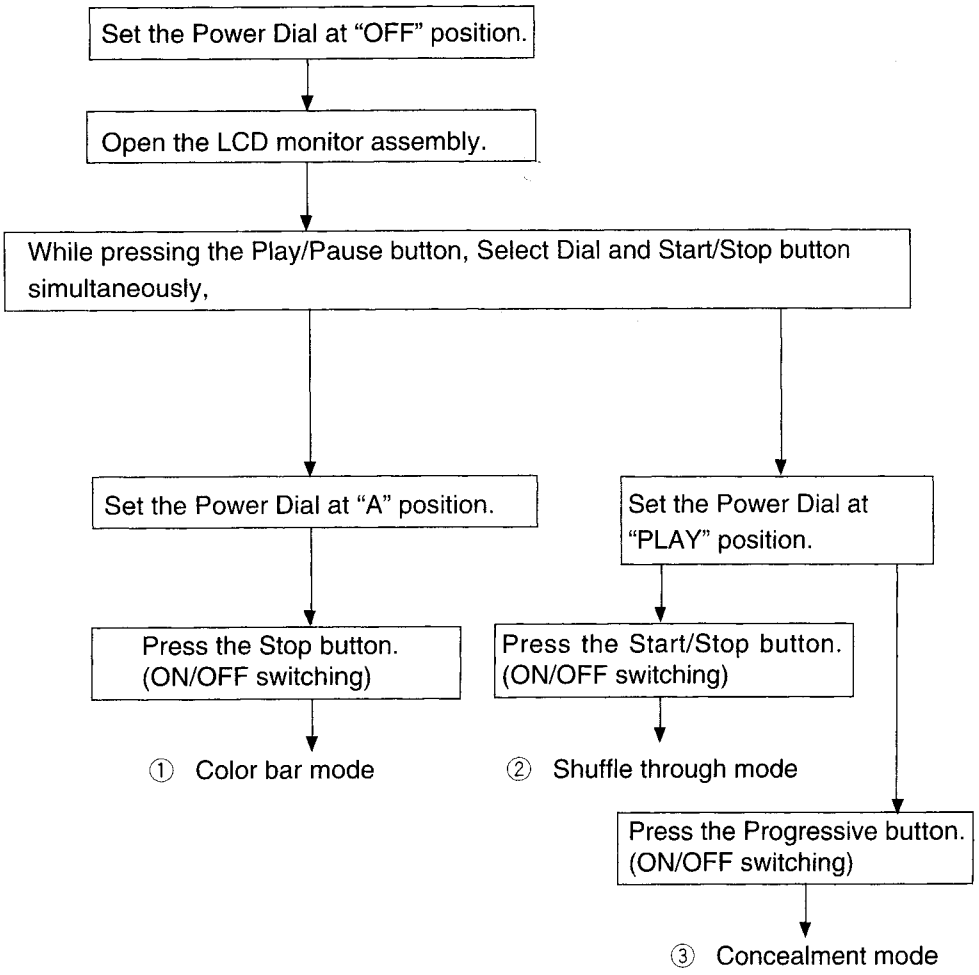

6.2.3 How to cancel test mode

Set the Power Dial to "OFF" position in a test mode to cancel the test mode.

JVC

SERVICE MANUAL

DIGITAL VIDEO CAMERA

GR-DVL9000EA/DVL9000EG

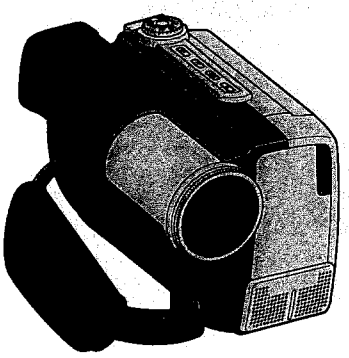

Mini DV PAL

Regarding service information other than these sections, refer to the GR-DVL9000EG service manual (No. 86404). Also, be sure to note important safety precautions provided in the service manual.

SPECIFICATIONS *(The specifications shown pertain specifically to the model GR-DVL9000EA)*

General

Power	: DC 6.3 V⎓ (using AC Adapter) DC 7.2 V⎓ (using Battery)
Power consumption	: 6.3 W (viewfinder on), 8.2 W (LCD monitor on)
Format	: DV Format (SD mode)
Signal format	: PAL Standard
Video signal recording format	: Digital Component Recording
Cassette	: MINI DV Cassette
Tape Speed	: SP: 18.8 mm/s LP: 12.5 mm/s
Maximum recording time	: SP: 60 min. LP: 90 min. (using DVM-60 cassette)
Pickup	: 1/3" CCD (Progressive Scan CCD)
Lens	: F1.2, f = 5 to 50 mm, 10:1 Power Zoom Lens
Filter diameter	: ø58 mm (when using the optional lens adapter GL-V5842U)
LCD monitor	: 4", 112,000 pixel TFT/LCD panel
Viewfinder	: 0.55" colour LCD, 113,000 pixel
Operating temperature	: 0 to 40°C
Operating humidity	: 35 to 80%
Storage temperature	: –20 to 50°C
Dimensions	: 86 (W) x 86 (H) x 145 (D) mm
Weight	: Approx. 670 g (without cassette and battery) Approx. 780 g (incl. cassette and battery)

Video

Output	: 1 Vp-p, 75 Ω unbalanced, analogue output (via ø3.5 mm AV output jack)
S VIDEO output	: Y: 1 Vp-p, 75 Ω, analogue output C: 0.29 Vp-p, 75 Ω, analogue output
DV output	: 4-pin, IEEE1394 conformant, digital output
Digital still output	: ø3.5 mm, 4-pole, mini-head jack (compatible with RC-5325 plug)

Audio

Output	: –8 dBs, 1 kΩ analogue output (via ø3.5 mm AV output jack)
Headphone output	: Stereo (via ø3.5 mm AV output jack)
External microphone input	: –62 dBs, high impedance unbalanced with ø3.5 mm (STEREO)
Speaker	: Monaural

AC ADAPTER/CHARGER

Power	: AC 110 to 240 V∿, 50/60 Hz
Power consumption	: 20 W
Output power	: DC 7.2 V⎓, 1.2 A (charge) : DC 6.3 V⎓, 1.8 A (VTR)
Operating temperature	: 0°C to 40°C (when charging, 10°C to 35°C)
Dimensions	: 94 mm (W) x 36 mm (H) x 122 mm (D)
Weight	: Approx. 380 g (AA-V80EK) Approx. 330 g (AA-V80EA)

Specifications shown are for SP mode unless otherwise indicated. E & O.E.
Design and specifications subject to change without notice.

COPYRIGHT © 1998 VICTOR COMPANY OF JAPAN, LTD.

No. 86414
April 1998

TABLE OF CONTENTS

4. CHARTS AND DIAGRAMS

4.10 VITERBI SCHEMATIC DIAGRAM 4-25

4.18 MAIN1 CIRCUIT BOARD 4-41

5. PARTS LIST

5.1 PACKING ASSEMBLY <M1> 5-1

The following table indicate main different points between models GR-DVL9000EG, GR-DVL9000EA and GR-DVL9000EG-S.

ITEM \ MODEL	GR-DVL9000EG	GR-DVL9000EA	GR-DVL9000EG-S
BATT. CHARG. ASSY	AA-V80EG C	AA-V80EA C	AA-V80EG C
CONNECTOR, CABLE ADAPTER	○	–	–
CONVERSION PLUG	–	–	○

Note: Mark ○ is used. Mark – is not used.

The following table indicate different parts number between models GR-DVL9000EG, GR-DVL9000EA and GR-DVL9000EG-S.

PACKING ASSEMBLY <M1>

REF No.	ITEM \ MODEL	GR-DVL9000EG	GR-DVL9000EA	GR-DVL9000EG-S
1	PACKING CASE	LY30744-001A	LY30744-003A	LY30744-004A
⚠ 4	BATT. PACK ASSY	LY30622-002B	←	LY30622-003A
⚠ 5	BATT. CHARG. ASSY	YQ21032M	YQ21032P	YQ21032Q
7	CONNECTOR, CABLE ADAPTER	PEMC1000-01-02	–	–
23	POLY BAG	YQM30061	–	YQM30061
27	SHEET (EN. CH. RU)	LYT0129-015A	–	LYT0129-015B
	SHEET (GE. FR. DU)	LYT0129-016A	–	–
	SHEET (SP. IT. DA)	LYT0129-017A	–	–
	SHEET (FI. SW. NO)	LYT0129-018A	–	–
	SHEET (CZ. PO. HU)	LYT0129-019A	–	–
	SHEET (EN)	–	LYT0130-002A	–
⚠ 28	IB (EN)	LYT0129-001A	LYT0130-001A	LYT0166-001A
29	IB (SOFT. E) (GE)	LYT0117-008A	–	–
	IB (SOFT. E) (FR)	LYT0117-009A	–	–
	IB (SOFT. E) (DU)	LYT0117-010A	–	–
	IB (SOFT. E) (SP)	LYT0117-011A	–	–
	IB (SOFT. E) (IT)	LYT0117-012A	–	–
	IB (SOFT. E) (DA)	LYT0117-013A	–	–
	IB (SOFT. E) (FI)	LYT0117-014A	–	–
	IB (SOFT. E) (SW)	LYT0117-015A	–	–
	IB (SOFT. E) (NO)	LYT0117-016A	–	–
	IB (SOFT. E) (RU)	LYT0117-018A	–	LYT0117-018A
	IB (SOFT. E) (CZ)	LYT0117-019A	–	–
	IB (SOFT. E) (PO)	LYT0117-020A	–	–

Note: Mark – is not used. Mark ← is same as left.

REF No.	ITEM / MODEL	GR-DVL9000EG	GR-DVL9000EA	GR-DVL9000EG-S
	IB (SOFT. E) (HU)	LYT0117-021A	–	–
	IB (SOFT. E) (CH)	–	–	LYT0117-017A
31	GUARANTEE CARD	BT-54008-1	–	–
33	SHEET (ATT.)	LYT0129-021A	–	–
⚠ 34	IB (GE)	LYT0129-002A	–	–
⚠	IB (FR)	LYT0129-003A	–	–
⚠	IB (DU)	LYT0129-004A	–	–
⚠	IB (SP)	LYT0129-005A	–	–
⚠	IB (IT)	LYT0129-006A	–	–
⚠	IB (DA)	LYT0129-007A	–	–
⚠	IB (FI)	LYT0129-008A	–	–
⚠	IB (SW)	LYT0129-009A	–	–
⚠	IB (NO)	LYT0129-010A	–	–
⚠	IB (RU)	LYT0129-011A	–	LYT0166-003A
⚠	IB (CZ)	LYT0129-012A	–	–
⚠	IB (PO)	LYT0129-013A	–	–
⚠	IB (HU)	LYT0129-014A	–	–
⚠	IB (CH)	–	–	LYT0166-002A
⚠ 37	CONVERSION PLUG	–	–	PEMC1012-02
⚠ 38	CAUTION SHEET	–	–	YU42117
39	WARRANTY CARD	–	BT-56001-1	–

FINAL ASSEMBLY <M2>

– ELECTRONIC VIEWFINDER SECTION –

REF No.	ITEM / MODEL	GR-DVL9000EG	GR-DVL9000EA	GR-DVL9000EG-S
⚠ 306	CASE (UPPER) ASSY	LY30576-002A	LY30576-003A	←
⚠ 313	EVF ASSY	YS20939B	YS20939C	←

MAIN1 BOARD ASSEMBLY <01>

REF No.	ITEM / MODEL	GR-DVL9000EG	GR-DVL9000EA	GR-DVL9000EG-S
R3653	MG RESISTOR	–	NRSA6AJ-0R0W	←

Note: Mark – is not used. Mark ← is same as left.

4.10 VITERBI SCHEMATIC DIAGRAM

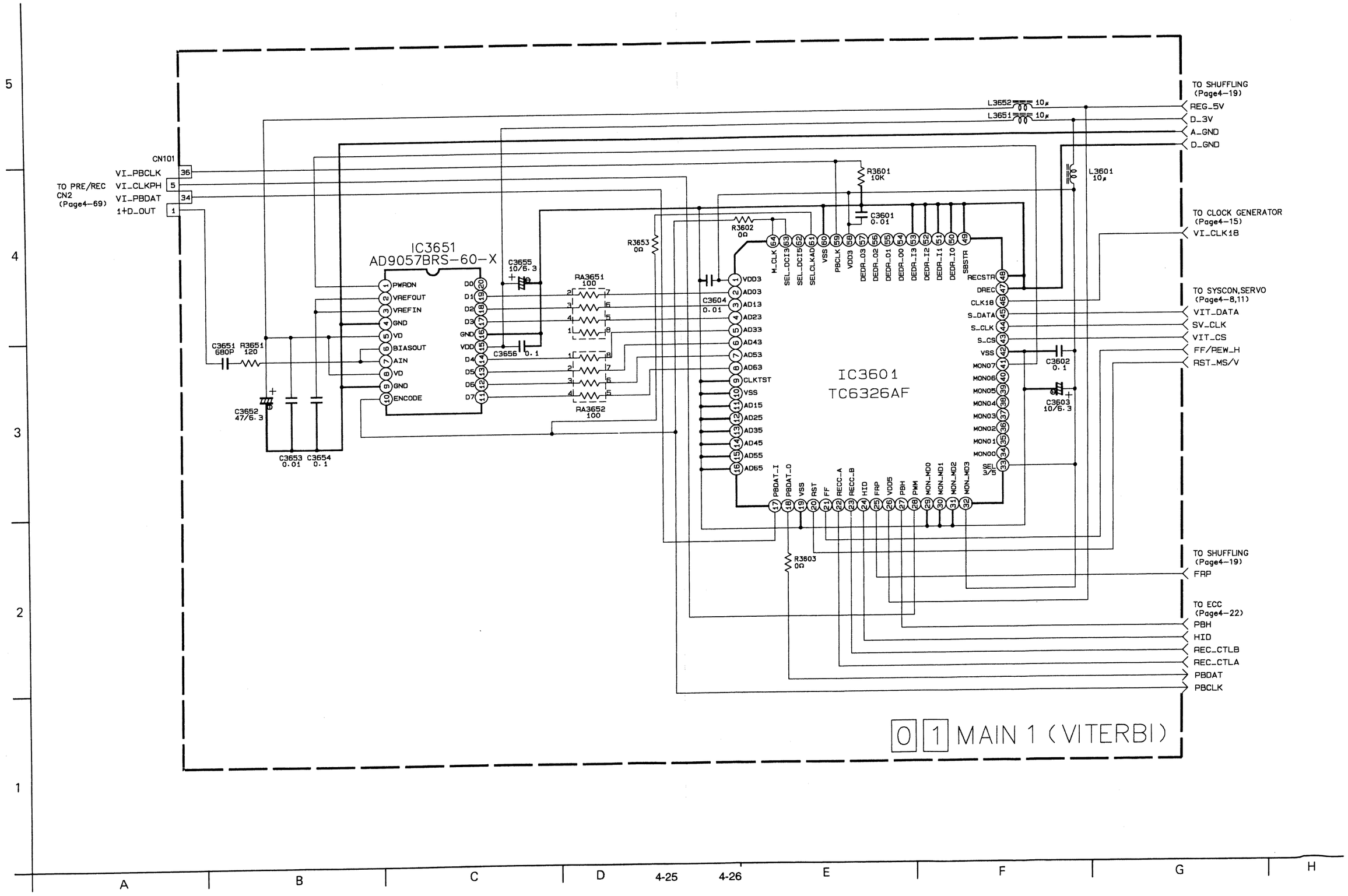

4.18 MAIN1 CIRCUIT BOARD

FOIL SIDE (B)

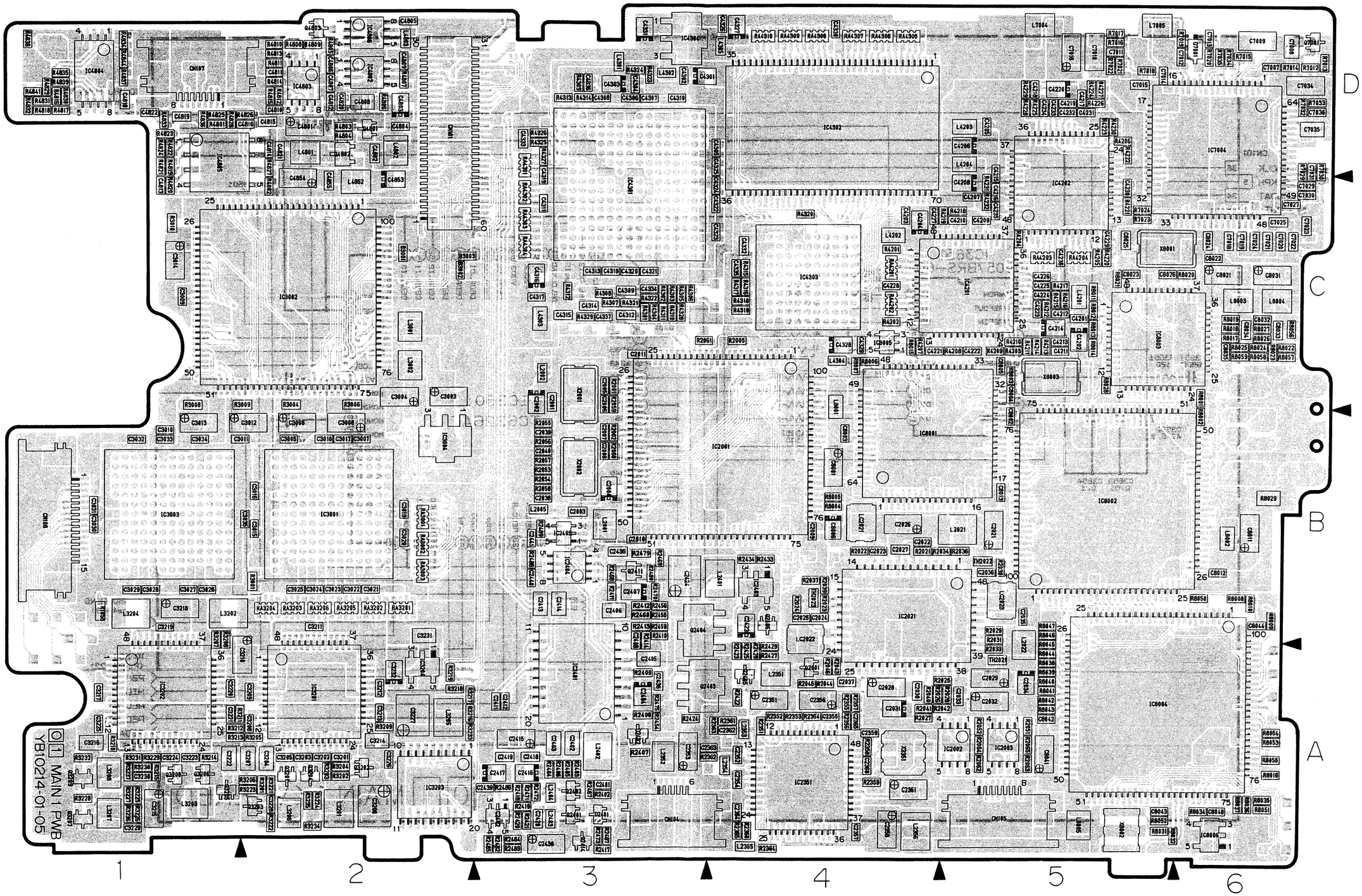

COMPONENT PARTS LOCATION GUIDE (MAIN1 PWB)

REF.No.	LOCATION		
CAPACITOR			
C1001	A	C	4A
C1002	A	C	3B
C1003	A	C	3B
C1004	A	C	2B
C1005	A	C	3A
C1006	A	C	3A
C1007	A	C	3A
C1008	A	C	3A
C1009	A	C	3A
C1010	A	C	3B
C1011	A	C	3B
C1012	A	C	3B
C1013	A	C	3B
C1014	A	C	2B
C1015	A	C	3B
C1017	A	C	4B
C1018	A	C	4B
C1019	A	C	4B
C1020	A	C	4A
C1021	A	C	4B
C1022	A	C	4A
C1023	A	C	4A
C1025	A	C	4B
C1026	A	C	4B
C1401	A	C	5B
C1402	A	C	5B
C1403	A	C	5B
C1404	A	C	5B
C1405	A	C	6A
C1406	A	C	5A
C1407	A	C	5B
C1408	A	C	5B
C1409	A	C	5B
C1410	A	C	5A
C1411	A	C	5A
C1412	A	C	4A
C1415	A	C	5B
C1416	A	C	5B
C1418	A	C	5B
C1419	A	C	5A
C1420	A	C	6B
C1421	A	C	4B
C1422	A	C	6A
C1423	A	C	5A
C1451	A	C	6B
C1452	A	C	5B
C1453	A	C	6B
C1454	A	C	6B
C1455	A	C	6B
C1456	A	C	6A
C1457	A	C	6A
C1458	A	C	6A
C2001	B	C	3C
C2002	B	C	3C
C2003	B	C	3B
C2004	B	C	3B
C2005	B	C	3C
C2006	B	C	3C
C2007	B	C	3B
C2008	B	C	3B
C2009	B	C	4B
C2010	B	C	3B
C2011	B	C	3C
C2021	B	C	5B
C2022	B	C	4B
C2023	B	C	4B
C2024	B	C	4B
C2025	B	C	4B
C2026	B	C	4B
C2027	B	C	4B
C2028	B	C	4A
C2029	B	C	5A
C2030	B	C	4A
C2031	B	C	4A
C2032	B	C	5A
C2033	B	C	5A
C2034	B	C	5A
C2035	B	C	5B
C2036	B	C	5B
C2037	B	C	4A
C2038	B	C	3B
C2039	B	C	3B
C2040	B	C	3B
C2351	B	C	4A
C2352	B	C	4A
C2353	B	C	3A
C2354	B	C	4A
C2355	B	C	4A
C2356	B	C	4A
C2357	B	C	4A
C2358	B	C	4A
C2359	B	C	4A

REF.No.	LOCATION		
C2360	B	C	4A
C2361	B	C	4A
C2362	B	C	4A
C2363	B	C	4A
C2364	B	C	4A
C2365	B	C	4A
C2401	B	C	3A
C2402	B	C	3A
C2403	B	C	3A
C2404	B	C	3A
C2405	B	C	3A
C2406	B	C	3B
C2407	B	C	3B
C2408	B	C	3A
C2411	B	C	3A
C2412	B	C	3A
C2413	B	C	3B
C2414	B	C	3B
C2415	B	C	3A
C2416	B	C	3A
C2417	B	C	3A
C2418	B	C	3A
C2419	B	C	3A
C2420	B	C	3A
C2423	B	C	4B
C2424	B	C	3B
C2435	B	C	3B
C2436	B	C	3A
C2438	B	C	3A
C2439	B	C	3A
C2440	B	C	3B
C2441	B	C	3B
C3001	A	C	4A
C3003	B	C	2C
C3004	B	C	2C
C3005	B	C	2B
C3006	B	C	2B
C3007	B	C	2B
C3008	B	C	2B
C3009	B	C	1C
C3010	B	C	1B
C3011	B	C	1B
C3012	B	C	2B
C3013	B	C	1B
C3014	B	C	1C
C3015	B	C	2B
C3016	B	C	2B
C3017	B	C	2B
C3018	B	C	2B
C3019	B	C	2B
C3020	B	C	2B
C3021	B	C	2B
C3022	B	C	2B
C3023	B	C	2B
C3024	B	C	2B
C3025	B	C	2B
C3026	B	C	1B
C3027	B	C	1B
C3028	B	C	1B
C3029	B	C	1B
C3030	B	C	1B
C3031	B	C	1B
C3032	B	C	1B
C3033	B	C	1B
C3034	B	C	1B
C3035	B	C	2B
C3102	A	C	1A
C3103	A	C	1B
C3104	A	C	1B
C3106	A	C	1B
C3107	A	C	2B
C3108	A	C	2B
C3109	A	C	2B
C3110	A	C	1A
C3201	B	C	2A
C3202	B	C	2A
C3203	B	C	2A
C3204	B	C	2A
C3205	B	C	2A
C3206	B	C	2A
C3207	B	C	2A
C3208	B	C	2A
C3209	B	C	2A
C3210	B	C	2A
C3211	B	C	2B
C3212	B	C	2A
C3213	B	C	2A
C3214	B	C	2A
C3215	B	C	1A
C3216	B	C	1A
C3217	B	C	1A
C3218	B	C	1B
C3219	B	C	1B
C3220	B	C	1A

REF.No.	LOCATION		
C3221	B	C	1A
C3222	B	C	1A
C3223	B	C	1A
C3224	B	C	1A
C3225	B	C	1A
C3226	B	C	2A
C3227	B	C	2A
C3228	B	C	2A
C3229	B	C	1A
C3230	B	C	1A
C3231	B	C	2B
C3232	B	C	2A
C3601	A	C	2C
C3602	A	C	2C
C3603	A	C	1C
C3604	A	C	2C
C3651	A	C	2C
C3652	A	C	3C
C3653	A	C	3C
C3654	A	C	2C
C3655	A	C	3C
C3656	A	C	2C
C4201	B	C	5C
C4202	B	C	5C
C4203	B	C	4C
C4204	B	C	4C
C4205	B	C	5D
C4206	B	C	5D
C4207	B	C	5C
C4208	B	C	5C
C4209	B	C	5C
C4210	B	C	5C
C4211	B	C	5C
C4212	B	C	5C
C4213	B	C	5C
C4214	B	C	5C
C4215	B	C	5D
C4216	B	C	5C
C4217	B	C	5D
C4218	B	C	5D
C4219	B	C	5D
C4220	B	C	5D
C4221	B	C	4C
C4222	B	C	5C
C4223	B	C	5C
C4224	B	C	5C
C4225	B	C	5C
C4226	B	C	5C
C4227	B	C	4C
C4228	B	C	4C
C4229	B	C	5C
C4230	B	C	5C
C4231	B	C	5D
C4232	B	C	5D
C4233	B	C	5D
C4234	B	C	5D
C4235	B	C	5C
C4236	B	C	5C
C4237	A	C	5C
C4238	A	C	5C
C4239	A	C	5C
C4240	A	C	5C
C4301	B	C	3D
C4302	B	C	3D
C4303	B	C	3D
C4304	B	C	3D
C4305	B	C	4D
C4306	B	C	3D
C4307	B	C	3D
C4308	B	C	3D
C4309	B	C	3C
C4310	B	C	3D
C4311	B	C	3C
C4312	B	C	3C
C4313	B	C	3C
C4314	B	C	3C
C4315	B	C	3C
C4316	B	C	3C
C4317	B	C	3C
C4318	B	C	3C
C4319	B	C	3C
C4320	B	C	3C
C4321	B	C	3C
C4322	B	C	4C
C4323	B	C	4C
C4324	B	C	4C
C4325	B	C	4D
C4326	B	C	4D
C4327	B	C	4D
C4328	B	C	4C
C4329	B	C	4C
C4330	B	C	4D
C4331	B	C	3D
C4332	B	C	4C

REF.No.	LOCATION		
C4333	B	C	3D
C4334	B	C	3C
C4335	B	C	4C
C4336	B	C	3D
C4337	B	C	3C
C4401	A	C	4C
C4402	A	C	4C
C4403	A	C	4C
C4405	A	C	3C
C4406	A	C	3C
C4407	A	C	3C
C4408	A	C	3C
C4409	A	C	3C
C4410	A	C	4C
C4411	A	C	4C
C4412	A	C	1A
C4413	A	C	1A
C4414	A	C	1A
C4415	A	C	1A
C4416	A	C	4D
C4417	A	C	4C
C4418	A	C	3D
C4701	A	C	1D
C4702	A	C	1D
C4703	A	C	1D
C4704	A	C	1D
C4705	A	C	1D
C4706	A	C	1D
C4707	A	C	1D
C4708	A	C	1D
C4801	B	C	2D
C4802	B	C	2D
C4803	B	C	2D
C4804	B	C	2D
C4805	B	C	2D
C4806	B	C	2D
C4807	B	C	2D
C4808	B	C	2D
C4809	B	C	2D
C4810	B	C	2D
C4811	B	C	2D
C4812	B	C	2D
C4813	B	C	1C
C4814	B	C	2D
C4815	B	C	2D
C4816	B	C	2D
C4818	B	C	1D
C4819	B	C	1D
C4820	B	C	2D
C4821	B	C	2D
C4822	B	C	1D
C4851	A	C	2C
C4852	A	C	2C
C4853	B	C	2C
C4854	B	C	2C
C4855	B	C	2C
C4856	A	C	2C
C4857	A	C	2C
C4858	A	C	1C
C4859	A	C	1C
C4860	A	C	2D
C4861	A	C	2D
C4862	A	C	2D
C4863	A	C	2D
C4864	A	C	2D
C4865	A	C	2D
C4866	A	C	2D
C4867	A	C	3D
C4868	A	C	3D
C7001	A	C	5C
C7002	A	C	5C
C7003	A	C	5C
C7004	A	C	5C
C7005	A	C	5D
C7006	A	C	6D
C7007	B	C	6D
C7008	B	C	6D
C7009	B	C	6D
C7010	B	C	5D
C7011	B	C	5D
C7012	B	C	6D
C7013	B	C	6D
C7014	B	C	5D
C7015	B	C	5D
C7016	B	C	5D
C7017	A	C	6D
C7018	B	C	6C
C7019	B	C	6C
C7020	B	C	6C
C7021	B	C	6C
C7022	B	C	6C
C7023	B	C	6C
C7024	B	C	6C
C7025	B	C	6C

REF.No.	LOCATION		
C7026	A	C	5C
C7027	B	C	6C
C7028	A	C	5C
C7029	B	C	6C
C7030	B	C	6C
C7031	B	C	6D
C7034	B	C	6D
C7035	B	C	6D
C7036	B	C	6D
C7037	A	C	5D
C7038	A	C	5D
C7039	A	C	5C
C7040	A	C	6D
C7041	A	C	6D
C8001	B	C	4B
C8002	B	C	5B
C8003	B	C	4B
C8004	B	C	5C
C8005	B	C	5C
C8006	B	C	4B
C8011	B	C	6B
C8012	B	C	6B
C8013	B	C	5B
C8021	B	C	6C
C8022	B	C	6C
C8023	B	C	5C
C8024	B	C	6C
C8025	B	C	5C
C8026	B	C	5C
C8031	B	C	6C
C8032	B	C	6C
C8033	B	C	6C
C8034	B	C	6C
C8035	B	C	6C
C8041	B	C	5A
C8042	B	C	5A
C8043	B	C	5A
C8044	B	C	6B
C8048	B	C	6A
CONNECTOR			
CN101	B	C	2C
CN102	A	C	3A
CN103	A	C	5A
CN104	B	C	3A
CN105	B	C	5A
CN106	A	C	6D
CN107	B	C	1D
CN108	B	C	1B
CN109	A	C	4D
CN110	A	C	3D
CN112	A	C	4D
CN113	A	C	1B
CN116	A	C	6C
CN121	A	C	5C
CN122	A	C	1D
CN123	A	C	1A
DIODE			
D1001	A	C	3B
D1002	A	C	2A
D1003	A	C	3B
D1004	A	C	3B
D1005	A	C	3B
D1006	A	C	4B
D1009	A	C	3B
D2401	B	C	3A
D2402	B	C	3A
D4401	A	C	3C
D4402	A	C	1A
D4403	A	C	3D
D4701	A	C	1D
D4851	A	C	2C
D7001	B	C	6D
DA1401	A	C	6A
DA1402	A	C	6A
IC			
IC1001	A	C	3A
IC1002	A	C	3B
IC1003	A	C	4B
IC1004	A	C	3B
IC1005	A	C	4A
IC1006	A	C	4B
IC1008	A	C	4B
IC1009	A	C	4A
IC1010	A	C	4B
IC1011	A	C	4B
IC1012	A	C	4A
IC1013	A	C	4B
IC1014	A	C	4A
IC1015	A	C	4B
IC1401	A	C	5B
IC1402	A	C	6A

REF.No.	LOCATION		
IC1403	A	C	5B
IC1451	A	C	6B
IC1452	A	C	6A
IC1453	A	C	6B
IC2001	B	C	4B
IC2002	B	C	5A
IC2003	B	C	5A
IC2021	B	C	4B
IC2351	B	C	4A
IC2401	B	C	3A
IC2402	B	C	3A
IC2403	B	C	4B
IC2404	B	C	3B
IC2405	B	C	3B
IC3001	B	C	2B
IC3002	B	C	2C
IC3003	B	C	1B
IC3004	B	C	2B
IC3101	A	C	2A
IC3102	A	C	1B
IC3103	A	C	2B
IC3105	A	C	2A
IC3201	B	C	2A
IC3202	B	C	1A
IC3203	B	C	2A
IC3204	B	C	2A
IC3601	A	C	2C
IC3651	A	C	2C
IC4201	B	C	5C
IC4202	B	C	5C
IC4203	A	C	5C
IC4301	B	C	3C
IC4302	B	C	4D
IC4303	B	C	4C
IC4304	B	C	3D
IC4401	A	C	3C
IC4402	A	C	4C
IC4403	A	C	4C
IC4404	A	C	1A
IC4405	A	C	4D
IC4406	A	C	3D
IC4407	A	C	4C
IC4408	A	C	4C
IC4701	A	C	1D
IC4802	B	C	2D
IC4803	B	C	2D
IC4804	B	C	1D
IC4805	B	C	1D
IC4806	B	C	2D
IC4851	A	C	2D
IC4852	A	C	2D
IC7001	A	C	5C
IC7002	A	C	5D
IC7003	A	C	5D
IC7004	B	C	6D
IC7005	A	C	6D
IC8001	B	C	4B
IC8002	B	C	5B
IC8003	B	C	5C
IC8004	B	C	5A
IC8005	B	C	4C
IC8006	B	C	6A
COIL			
L1001	A	C	4A
L1401	A	C	5A
L1402	A	C	4B
L1403	A	C	6A
L1451	A	C	5B
L2001	B	C	3B
L2002	B	C	3C
L2005	B	C	3B
L2021	B	C	5B
L2022	B	C	5A
L2351	B	C	4A
L2352	B	C	3A
L2353	B	C	4A
L2354	B	C	4A
L2355	B	C	4A
L2356	B	C	4A
L2401	B	C	4B
L2402	B	C	3A
L2403	B	C	3A
L2404	B	C	3A
L3001	B	C	2C
L3002	B	C	2C
L3101	A	C	1B
L3102	A	C	1C
L3201	B	C	2A
L3202	B	C	1B
L3203	B	C	1A
L3204	B	C	1B
L3205	B	C	2A
L3206	B	C	2A

REF.No.	LOCATION		
L3207	B	C	1A
L3208	B	C	1A
L3601	A	C	1C
L3651	A	C	3C
L3652	A	C	3C
L4201	B	C	5C
L4202	B	C	4C
L4203	B	C	5D
L4204	B	C	5D
L4301	B	C	3D
L4302	B	C	3D
L4303	B	C	3C
L4304	B	C	4C
L4305	B	C	4D
L4401	A	C	4C
L4402	A	C	1A
L4403	A	C	1A
L4404	A	C	4D
L4405	A	C	1A
L4406	A	C	4C
L4407	A	C	4C
L4701	A	C	1D
L4801	B	C	2D
L4802	B	C	2D
L4803	B	C	2D
L4851	A	C	2C
L4852	B	C	2C
L4853	A	C	1C
L7002	A	C	6D
L7003	A	C	5C
L7004	B	C	5D
L7005	B	C	5D
L8001	B	C	4B
L8002	B	C	6B
L8003	B	C	6C
L8004	B	C	6C
L8005	B	C	5A
L8006	A	C	5C
TRANSISTOR			
Q1001	A	C	3B
Q1002	A	C	3B
Q1003	A	C	3B
Q1005	A	C	4B
Q1006	A	C	4B
Q1007	A	C	4B
Q1008	A	C	4B
Q1009	A	C	4B
Q1010	A	C	4B
Q1403	A	C	5A
Q1404	A	C	5A
Q1405	A	C	6A
Q1406	A	C	4A
Q1407	A	C	6A
Q2001	B	C	4A
Q2401	B	C	3A
Q2402	B	C	3A
Q2403	B	C	3A
Q2404	B	C	3B
Q2405	B	C	4A
Q2406	B	C	4B
Q2411	B	C	3B
Q2414	B	C	3A
Q3201	B	C	2A
Q3202	B	C	2A
Q3203	B	C	2A
Q3204	B	C	2A
Q3205	B	C	1A
Q3206	B	C	1A
Q3207	B	C	1A
Q3208	B	C	1A
Q3209	B	C	1A
Q4401	A	C	4C
Q4402	A	C	3D
Q4403	A	C	3D
Q4404	A	C	3D
Q4405	A	C	3D
Q4406	A	C	3D
Q4407	A	C	3D
Q4701	A	D	1D
Q4801	B	C	2D
Q4802	B	C	2D
Q4803	B	C	2D
Q4851	A	C	2C
Q4852	A	C	2D
Q7001	B	C	6D
RESISTOR			
R1001	A	C	3B
R1002	A	C	3B
R1003	A	C	2B
R1004	A	C	2B
R1005	A	C	2B

REF.No.	LOCATION			REF.No.	LOCATION			REF.No.	LOCATION			REF.No.	LOCATION			REF.No.	LOCATION			REF.No.	LOCATION			REF.No.	LOCATION		
R1006	A	C	2A	R1434	A	C	5A	R2468	B	C	3B	R4222	B	C	5D	R4451	A	C	3D	R7011	A	C	5D	RA3002	B	C	2B
R1007	A	C	2A	R1435	A	C	5B	R2469	B	C	3B	R4223	B	C	5D	R4452	A	C	3D	R7012	B	C	6D	RA3003	B	C	2B
R1008	A	C	2A	R1451	A	C	6B	R2470	B	C	3B	R4224	B	C	5D	R4453	A	C	3C	R7013	B	C	6D	RA3101	A	C	2B
R1009	A	C	2A	R1452	A	C	6B	R2471	B	C	3A	R4225	B	C	5D	R4454	A	C	4B	R7014	B	C	6D	RA3102	A	C	2B
R1010	A	C	2A	R1453	A	C	6A	R2472	B	C	3A	R4226	B	C	5D	R4455	A	C	3C	R7015	B	C	6D	RA3103	A	C	1B
R1011	A	C	3A	R2001	B	C	3C	R2473	B	C	3A	R4227	B	C	5D	R4456	A	C	4C	R7016	B	C	5D	RA3104	A	C	1B
R1012	A	C	3A	R2002	B	C	3B	R2475	B	C	3A	R4228	B	C	5D	R4457	A	C	4C	R7017	B	C	5D	RA3201	B	C	2B
R1013	A	C	3A	R2005	B	C	4C	R2479	B	C	3B	R4229	B	C	5D	R4458	A	C	4C	R7018	B	C	5D	RA3202	B	C	2B
R1014	A	C	3A	R2021	B	C	4B	R2480	B	C	3B	R4230	B	C	5D	R4459	A	C	4C	R7019	B	C	6D	RA3203	B	C	2B
R1015	A	C	3A	R2022	B	C	4B	R2482	B	C	3A	R4231	B	C	5C	R4460	A	C	4D	R7020	B	C	6D	RA3204	B	C	2B
R1016	A	C	3B	R2023	B	C	4B	R2483	B	C	3A	R4232	B	C	5C	R4461	A	C	4C	R7021	B	C	5D	RA3205	B	C	2B
R1017	A	C	3B	R2024	B	C	4B	R2484	B	C	3A	R4233	A	C	4C	R4462	A	C	1A	R7022	B	C	5D	RA3206	B	C	2B
R1018	A	C	3B	R2025	B	C	5A	R2485	B	C	3A	R4234	A	C	5C	R4463	A	C	3D	R7023	B	C	5C	RA3651	A	C	2C
R1019	A	C	3A	R2026	B	C	4A	R2486	B	C	3A	R4235	A	C	5C	R4464	A	C	3D	R7024	B	C	5C	RA3652	A	C	2C
R1021	A	C	4B	R2027	B	C	4A	R2487	B	C	3A	R4236	A	C	5C	R4465	A	C	4C	R7025	A	C	6D	RA4201	B	C	4C
R1022	A	C	4B	R2028	B	C	5A	R2488	B	C	3B	R4301	B	C	3C	R4466	A	C	3D	R7026	A	C	6D	RA4202	B	C	4C
R1023	A	C	4B	R2029	B	C	5B	R2489	B	C	3B	R4302	B	C	3C	R4701	A	C	1D	R7027	A	C	6D	RA4203	B	C	5C
R1024	A	C	2A	R2030	B	C	5B	R3001	B	C	2B	R4303	B	C	3C	R4702	A	C	1D	R7028	A	C	6D	RA4204	B	C	5C
R1025	A	C	2A	R2031	B	C	5B	R3004	B	C	2C	R4304	B	C	3C	R4703	A	C	1D	R7029	B	C	6D	RA4301	B	C	3D
R1026	A	C	3A	R2033	B	C	5A	R3006	B	C	2C	R4305	B	C	3C	R4704	A	C	1D	R7030	B	C	6D	RA4302	B	C	3C
R1027	A	C	3B	R2034	B	C	5B	R3008	B	C	1C	R4306	B	C	3C	R4705	A	C	1D	R7032	B	C	6D	RA4303	B	C	3C
R1028	A	C	2A	R2036	B	C	5B	R3009	B	C	2C	R4307	B	C	3C	R4706	A	C	1D	R7033	B	C	6D	RA4304	B	C	3C
R1029	A	C	2A	R2037	B	C	4B	R3010	B	C	1C	R4308	B	C	3C	R4707	A	C	1D	R7034	B	C	6D	RA4305	B	C	4D
R1030	A	C	3B	R2039	B	C	4B	R3011	A	C	3A	R4309	B	C	3D	R4708	A	C	1D	R7035	B	C	6D	RA4306	B	C	4D
R1031	A	C	3B	R2040	B	C	4A	R3012	A	C	3A	R4310	B	C	3C	R4709	A	C	1D	R7036	A	C	6D	RA4307	B	C	4D
R1032	A	C	3B	R2041	B	C	4A	R3102	A	C	2B	R4311	B	C	3C	R4710	A	C	1D	R7037	A	C	5D	RA4308	B	C	4D
R1033	A	C	3B	R2042	B	C	5A	R3103	A	C	2B	R4312	B	C	3C	R4711	A	C	1D	R8001	B	C	6C	RA4309	B	C	4D
R1034	A	C	3B	R2043	B	C	4A	R3104	A	C	1A	R4313	B	C	3D	R4712	A	C	1D	R8002	B	C	6B	RA4310	B	C	4D
R1035	A	C	3A	R2044	B	C	4A	R3105	A	C	1A	R4314	B	C	3D	R4713	A	C	1D	R8003	B	C	5C				
R1036	A	C	3B	R2045	B	C	4A	R3106	A	C	2B	R4315	B	C	4C	R4714	A	C	1D	R8004	B	C	4B	**TEST POINT**			
R1037	A	C	3B	R2046	B	C	4A	R3201	B	C	2A	R4316	B	C	4C	R4801	B	C	1D	R8005	B	C	4B				
R1038	A	C	3B	R2051	B	C	5A	R3202	B	C	2A	R4317	B	C	4C	R4802	B	C	2C	R8006	B	C	4C	TP4201	A	C	5C
R1039	A	C	3A	R2052	B	C	5A	R3203	B	C	2A	R4318	B	C	4C	R4803	B	C	2D	R8007	B	C	4C	TP4202	A	C	5C
R1040	A	C	3A	R2053	B	C	3B	R3204	B	C	2A	R4319	B	C	4C	R4804	B	C	2D	R8008	B	C	6B	TP4203	A	C	5C
R1041	A	C	3B	R2054	B	C	3B	R3205	B	C	2A	R4320	B	C	4C	R4805	B	C	2D	R8009	B	C	6B	TP4801	A	C	1D
R1042	A	C	3A	R2055	B	C	3B	R3206	B	C	2A	R4321	B	C	3C	R4806	B	C	2D	R8010	B	C	6B				
R1043	A	C	3A	R2056	B	C	3B	R3207	B	C	1A	R4322	B	C	3C	R4807	B	C	2D	R8011	B	C	5C	**OTHER**			
R1044	A	C	3A	R2057	B	C	3B	R3208	B	C	1A	R4323	B	C	3D	R4808	B	C	2D	R8012	B	C	5C				
R1045	A	C	3B	R2058	B	C	3B	R3209	B	C	2A	R4324	B	C	3D	R4809	B	C	2D	R8013	B	C	5C	CF1001	A	C	3B
R1046	A	C	4B	R2059	B	C	3C	R3210	B	C	1A	R4325	B	C	3D	R4810	B	C	2D	R8014	B	C	5C	F7001	A	C	6D
R1047	A	C	4B	R2060	B	C	3B	R3211	B	C	1A	R4326	B	C	3D	R4811	B	C	2D	R8015	B	C	4C	J8001	A	D	6B
R1048	A	C	4B	R2061	B	C	3C	R3212	B	C	1A	R4327	B	C	3D	R4812	B	C	2D	R8016	B	C	6A	LC2021	B	C	4B
R1049	A	C	4B	R2062	B	C	5A	R3213	B	C	1A	R4328	B	C	3C	R4813	B	C	2D	R8017	B	C	6C	LC2022	B	C	4B
R1050	A	C	3B	R2063	B	C	5A	R3214	B	C	1A	R4329	B	C	3C	R4814	B	C	2D	R8018	B	C	6C	LC2023	B	C	5B
R1051	A	C	4B	R2064	B	C	5A	R3215	B	C	1A	R4401	A	C	4C	R4815	B	C	2D	R8019	B	C	6C	TH2021	B	C	5A
R1052	A	C	4B	R2065	B	C	5A	R3216	B	C	2A	R4402	A	C	4C	R4816	B	C	1D	R8020	B	C	6C	TH2022	B	C	5B
R1053	A	C	4B	R2351	B	C	4A	R3217	B	C	2A	R4403	A	C	4C	R4817	B	C	1D	R8021	B	C	5C	TH2023	B	C	4B
R1054	A	C	3B	R2352	B	C	4A	R3218	B	C	2A	R4404	A	C	4C	R4818	B	C	1D	R8022	B	C	6C	X1401	A	C	5A
R1055	B	C	1B	R2353	B	C	4A	R3219	B	C	2A	R4405	A	C	4C	R4819	B	C	1D	R8023	B	C	6C	X1451	A	C	6A
R1056	A	C	3B	R2354	B	C	4A	R3220	A	C	3A	R4406	A	C	4C	R4820	B	C	1C	R8024	B	C	6C	X2001	B	C	3C
R1057	A	C	2B	R2355	B	C	4A	R3221	B	C	2A	R4407	A	C	4C	R4821	B	C	1D	R8025	B	C	6C	X2002	B	C	3B
R1058	A	C	4A	R2356	B	C	4A	R3222	B	C	2A	R4408	A	C	4C	R4822	B	C	1D	R8026	B	C	6C	X2351	B	C	4A
R1059	A	C	3B	R2357	B	C	4A	R3223	B	C	2A	R4409	A	C	4C	R4823	B	C	1D	R8027	B	C	6C	X3101	A	C	1B
R1060	A	C	2B	R2358	B	C	4A	R3224	B	C	2A	R4410	A	C	3C	R4824	B	C	1D	R8028	B	C	5C	X4401	A	C	4C
R1061	A	C	2B	R2359	B	C	4A	R3225	B	C	1A	R4411	A	C	3C	R4825	B	C	1D	R8029	B	C	6B	X8001	B	C	5C
R1062	A	C	2B	R2360	B	C	4A	R3226	B	C	1A	R4412	A	C	3C	R4826	B	C	2D	R8031	B	C	5A	X8002	B	C	5A
R1063	A	C	2B	R2361	B	C	4A	R3227	B	C	1A	R4413	A	C	3C	R4827	B	C	2D	R8032	B	C	6A	X8003	B	C	5C
R1064	A	C	2B	R2362	B	C	4A	R3228	B	C	1A	R4414	A	C	3C	R4828	B	C	1D	R8034	B	C	6A				
R1065	A	C	2B	R2363	B	C	4A	R3229	B	C	1A	R4415	A	C	3C	R4829	B	C	1D	R8035	B	C	6A				
R1066	A	C	3B	R2364	B	C	4A	R3230	B	C	1A	R4416	A	C	3C	R4830	B	C	1D	R8036	B	C	6A				
R1069	A	C	4B	R2365	B	C	4A	R3231	B	C	1A	R4417	A	C	4C	R4831	B	C	1D	R8037	B	C	6A				
R1070	A	C	4B	R2402	B	C	3A	R3232	B	C	1A	R4418	A	C	4C	R4832	B	C	1D	R8038	B	C	5A				
R1071	A	C	4B	R2403	B	C	3A	R3233	B	C	2A	R4419	A	C	3C	R4833	B	C	1D	R8039	B	C	5A				
R1072	A	C	4B	R2404	B	C	3A	R3234	B	C	2A	R4420	A	C	3C	R4834	B	C	1D	R8040	B	C	5A				
R1401	A	C	5B	R2405	B	C	3A	R3235	B	C	2A	R4421	A	C	3C	R4835	B	C	1D	R8041	B	C	5A				
R1402	A	C	5B	R2406	B	C	3A	R3236	B	C	1A	R4422	A	C	3C	R4836	B	C	1D	R8042	B	C	5A				
R1403	A	C	5B	R2407	B	C	3A	R3237	B	C	1A	R4423	A	C	3C	R4837	B	C	1D	R8043	B	C	5A				
R1404	A	C	5B	R2408	B	C	3A	R3601	A	C	2C	R4424	A	C	3C	R4838	B	C	1D	R8044	B	C	5A				
R1405	A	C	5A	R2409	B	C	3A	R3602	A	C	2C	R4425	A	C	3C	R4839	B	C	1D	R8045	B	C	5A				
R1406	A	C	5A	R2410	B	C	3B	R3603	A	C	2C	R4426	A	C	3C	R4841	B	C	1D	R8046	B	C	5B				
R1407	A	C	6A	R2411	B	C	3B	R3651	A	C	2C	R4427	A	C	3C	R4844	B	C	1D	R8047	B	C	5B				
R1408	A	C	5A	R2412	B	C	3B	R3652	A	C	2C	R4428	A	C	3C	R4851	A	C	3C	R8050	B	C	6B				
R1409	A	C	5B	R2413	B	C	3B	R3653	A	C	2C	R4429	A	C	3C	R4852	A	C	2C	R8051	B	C	6A				
R1410	A	C	5A	R2414	B	C	3A	R4201	B	C	4C	R4430	A	C	3C	R4853	A	C	3C	R8052	B	C	5A				
R1411	A	C	5A	R2417	B	C	3A	R4202	B	C	4C	R4431	A	C	3D	R4854	A	C	2C	R8053	B	C	6A				
R1412	A	C	5A	R2418	B	C	3A	R4203	B	C	5C	R4432	A	C	3D	R4855	A	C	2C	R8054	B	C	6A				
R1413	A	C	5A	R2419	B	C	3A	R4204	B	C	5C	R4433	A	C	3C	R4856	A	C	1C	R8055	B	C	6A				
R1414	A	C	5B	R2420	B	C	3A	R4205	B	C	5C	R4434	A	C	3D	R4857	A	C	1D	R8056	B	C	6C				
R1417	A	C	4A	R2421	B	C	3A	R4206	B	C	5D	R4435	A	C	3D	R4858	A	C	2D	R8057	B	C	6C				
R1418	A	C	6A	R2422	B	C	4A	R4207	B	C	4C	R4436	A	C	3D	R4859	A	C	2D	R8058	B	C	6C				
R1419	A	C	5B	R2423	B	C	4A	R4208	B	C	5C	R4437	A	C	3D	R4860	A	C	2D	R8059	B	C	6C				
R1420	A	C	5A	R2424	B	C	3A	R4209	B	C	5C	R4438	A	C	3D	R4861	A	C	3D	RA1001	A	C	3B				
R1421	A	C	4B	R2425	B	C	4A	R4210	B	C	5C	R4439	A	C	3D	R4862	A	C	3D	RA1002	A	C	3B				
R1422	A	C	4B	R2427	B	C	4A	R4211	B	C	5C	R4440	A	C	3D	R4863	A	C	2D	RA1003	A	C	3B				
R1423	A	C	5B	R2428	B	C	4A	R4212	B	C	5C	R4441	A	C	4D	R7001	A	C	5C	RA1004	A	C	3B				
R1424	A	C	5B	R2429	B	C	4A	R4213	B	C	5C	R4442	A	C	4D	R7002	A	C	5C	RA1005	A	C	3A				
R1425	A	C	5B	R2433	B	C	4B	R4214	B	C	5C	R4443	A	C	1A	R7003	A	C	5C	RA1006	A	C	4A				
R1426	A	C	4B	R2434	B	C	4B	R4215	B	C	5C	R4444	A	C	1A	R7004	A	C	5D	RA1007	A	C	4A				
R1427	A	C	5B	R2454	B	C	3A	R4216	B	C	5C	R4445	A	C	1A	R7005	A	C	5D	RA1010	A	C	3B				
R1428	A	C	5B	R2455	B	C	3B	R4217	B	C	5C	R4446	A	C	3D	R7006	A	C	5D	RA1402	A	C	5B				
R1430	A	C	4B	R2456	B	C	3B	R4218	B	C	5C	R4447	A	C	3D	R7007	A	C	5D	RA1403	A	C	5A				
R1431	A	C	4B	R2459	B	C	3B	R4219	B	C	5C	R4448	A	C	4D	R7008	A	C	5D	RA1404	A	C	5A				
R1432	A	C	6A	R2460	B	C	3B	R4220	B	C	5C	R4449	A	C	4D	R7009	A	C	5D	RA1406	A	C	5B				
R1433	A	C	6A	R2467	B	C	3A	R4221	B	C	5C	R4450	A	C	3D	R7010	A	C	5D	RA3001	B	C	2B				